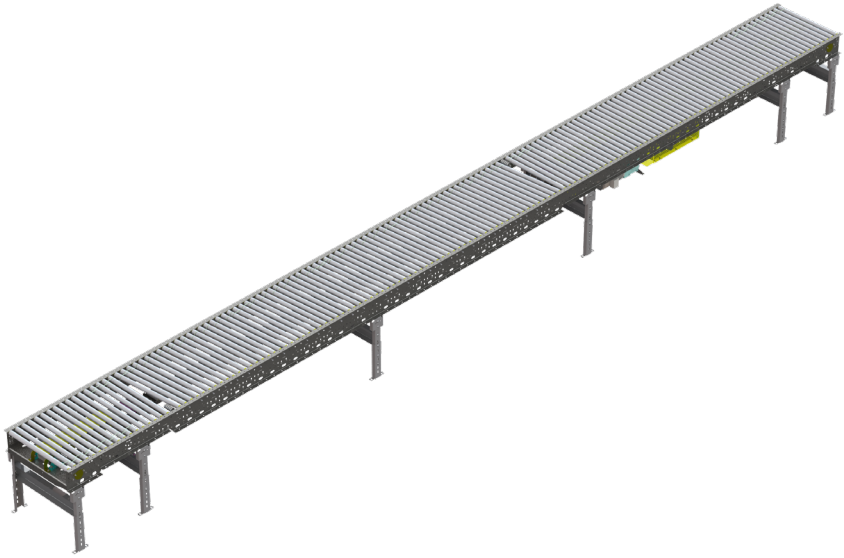

Installation and Maintenance Manual

Model: RLVAC

Effective February 2022

Rev. B

Bastian SOLUTIONS

a TOYOTA ADVANCED LOGISTICS company

Contributions

ROLE	NAME	TITLE
Author	Ben Baker	Senior Design Engineer
Checker	Brad Paris	Senior Design Engineer
Approver	Sam Osterhout	Design Team Lead

Revisions

DATE	REVISION	DESCRIPTION	AUTHOR
11/18/2021	A	Initial Document Creation	Ben Baker
2/18/2022	B	Document Formatting Edits	Andrew W. Jones

Term and Acronym Definitions

TERM/ACRONYM	DEFINITION
2 Groove	Roller format which uses O-Rings to transfer rotational motion from one roller to another in DC conveyor.
AC	Alternating current
Accumulation	The collection or staging of multiple cartons, cases, or totes of product on conveyor.
ATO	Assembled to Order; Orders consisting of standard products
Back pressure	Pressure against carton(s) in the direction of carton flow resulting from weight of densely accumulated cartons.
BF	Between frame; this refers to the distance between conveyor bed side frames.
BHCS	Button head cap screw
BOM	Bill of Materials
Carton or Case	Term for a conveyable item (cardboard box, tote, etc.)
CB	Carriage bolt
CCW	Counter-clockwise
CDAC 1.0	Conveyor Director Control Card 1.0 - Bastian Solutions' dual zone control card designed for zero pressure control of low-voltage (24V nominal) DC solenoids for belt-under roller conveyor.
CDDC 1.0	Conveyor Director Control Card 1.0 - Bastian Solutions' dual zone control card designed for zero pressure control of low-voltage (24V or 48V nominal) DC powered MDRs.
Center Drive	Drive format of AC conveyor where the drive unit is mounted underneath the conveyor.
CW	Clockwise
DC	Direct current
Diffuse	A photoeye format that houses both the emitter and receiver and senses an object when the light beam is reflected back to the sensor. This type of photoeye is a standalone unit and does not use reflectors.
Discharge	The point where cartons, cases, or totes exit a conveyor or similar unit used in a material handling system.
Divert	(noun) A conveyor unit used to change the direction of a carton, case, or tote in a controlled manner. (verb) To change the direction of a carton, case, or tote in a controlled manner.
Double-dispense	Event in which two or more cartons are dispensed when a single carton, case, or tote is requested. This is generally a result of two cartons, cases, or totes being in full contact just prior to reaching the dispensing point.
Drive Card	A control card used to power and control the logic of one or more zones of zero pressure conveyor.
Drive Pulley	A motor-driven pulley used to transmit rotational energy to linear motion in AC belts.
Dutchman	A short, removable section of belt used to take up slack developed in AC belts after they have stretched from long term use.
End stop	A plate mounted to the end of a conveyor with the intent of stopping and holding a carton, case, or tote in position until removed by a user or diverted by a conveyor unit.
E-stop	A highly visible button or pull cable designed to shut down equipment in the case of an emergency.
ETO	Engineered to Order; Orders requiring custom Engineering
FAT	Factory Acceptance Testing
Flange	A feature in sheet metal consisting of a face and bend connected to an existing face along a straight edge.

Flash	Excess material left on a part by a molding or forming process, created by material leaking between the separate parts of the mold.
Gapping	The separation of cartons, cases, or totes. Generally done by progressively increasing the speed of consecutive zones or belts, forcing cartons, cases, or totes to "pull a gap."
Guide Rail	Mechanism used to maintain the desired position of conveyable cartons, cases, or totes on their respective conveying surface.
HHCS	Hex head cap screw
ID	Inner diameter of a circular, cylindrical or arced body.
Idler Roller	Conveyor roller that is unpowered and used to support a belt.
Infeed	The point where cartons, cases, or totes enter a conveyor or similar unit used in a material handling system.
Live	A conveyor or zone which runs in response to a simple “enable” signal or runs whenever power is applied, without any zero pressure accumulation logic.
LOTO	Lockout Tagout
Mark Number	A numeric or alphanumeric term used to uniquely identify a conveyor bed or collection of beds (of similar model type) within a material handling system.
Match	A mark made on mating conveyor assemblies to assist in identifying orientation and placement within a system.
MDR	Motorized drive roller; DC powered conveyor roller with an internally mounted motor which may be controlled via internal or external commutation.
Minimum Pressure	Allows cartons, cases, or totes to lightly touch with up to 2% back pressure while being conveyed to eliminate product damage.
OAW	Overall width of any given conveyor bed, measured between the outside flanges of the sideframes.
OD	Outer diameter of a circular, cylindrical, or arced body.
O-Ring	A urethane ring or band with a circular cross section used for power transmission in DC conveyor applications.
OSHA	Occupational Safety and Health Administration
PE	Photoeye; Device used to detect the presence of an object by sensing a light beam. Common types are diffuse, retroreflective, and through-beam.
PELV	Protected Extra Low Voltage, a voltage level (less than 60V DC or 25Vrms AC in the context of EN 60204-1) that is low enough to be safe in the case of indirect or small area direct contact. PELV circuits are required to be connected to earth ground.
PM	Project Management (or Project Manager)
PO	Purchase Order
Polytier	Heavy duty floor support with a wide stance, capable of supporting multiple levels and types of conveyor.
PPE	Personal protective equipment
Prox Sensor	A sensor able to detect the presence of nearby objects without any physical contact.
Pulley	Mechanical device used to change the direction of the belt in a conveyor system, to drive and/or tension the belt.
Reflector	A reflective component needed for retroreflective photoeyes to receive transmitted light or radiation when no object is in front of the photoeye.
Retroreflective	Of or relating to a surface or device that reflects light or other radiation back to its source.
Return Idlers	Belt-routing rollers on the underside of any given AC conveyor.
RLCAC	Roller Live Curve AC
RLSAC	Roller Live Spur AC

Roller	Powered or unpowered cylindrically-shaped material handling component used for mechanical power transmission, a conveying surface, and/or support for a belted conveying surface.
Shingling	Event in which surfaces of adjacent cartons, cases, or totes are forced to lift off the conveyor due to elevated uneven carton, case, or tote back pressure.
Side Frame	Structural member used to support rotating components needed for conveyor beds.
Singulation	The active separation of cartons, cases, or totes.
Skatewheel	Small unpowered wheels used to replicate nearly frictionless guidance or support of conveyable cartons, cases, or totes.
Skew	A format of conveyor where one end of all rollers are shifted to provide an angled conveying surface for left or right justification of cartons, cases, or totes.
SKU	Stock Keeping Unit; Product and service identification code for a product (i.e. bar code).
Slug Release	See **Train Release**.
Snub Roller	A roller or pulley mounted to increase the arc of contact between a belt and drive pulley. Additionally, this can be used to change the direction of the return belt travel.
Splice Assembly	A five-component assembly-consisting of a plate (or formed plate), two bolts, and two nuts-that is used to secure a piece of guide rail to an adjacent piece of guide rail, or a side frame to an adjacent side frame. This is used to provide additional structural rigidity and ensure relative position of components is maintained.
Spur	A format of DC conveyor used to create linear transitions into intersecting lines of conveyor positioned at a non-perpendicular angle. Typically includes 30deg and 22deg configurations.
Tail Pulley	A non-driven pulley located at the tail end of the conveyor.
Takeup Pulley	Pulley with an adjustable position used to eliminate unnecessary slack in a belt.
Takeup Screws	Adjustment screw used to adjust the position of a takeup pulley.
TOR	Top of roller; this refers to the elevation of the conveying surface with respect to the floor on which the conveyor is sitting.
Track	To adjust the position of conveyor components in such a way that engourages proper belt alignment on a system.
Tracking Bands	Thin plastic bands installed on head or secondary drive roller to help keep DC format conveyor belts tracked.
Train Release	The release or activation of all zones in a line of accumulating conveyor at the same time.
UHMW	Ultra-high molecular weight polyethylene plastic, used to reduce friction and wear.
Waterfall	Method of overlapping guide rail such that cartons, cases, or totes cannot catch on downstream guide rail.
Wiz Nut	A serrated flange nut used to cut into the surface of the component it is tightened against.
Zero Pressure	Condition where adjacent cartons, cases, or totes are not in contact with one another.
Zone	A section of conveyor that can be independently controlled for the purposes of zero pressure accumulation.
ZPA	Zero Pressure Accumulation; a method of collecting, staging, and/or transporting multiple cartons, cases, or totes on zoned conveyor without the products touching each other.

Table of Contents

List of Figures

List of Tables

Reference Documents

MANUFACTURER	MANUAL
Bastian Solutions	Conveyor Director AC User Manual
Bastian Solutions	Side Cover and Guiderail Installation Manual
Bastian Solutions	Support Installation Manual
Bastian Solutions	RLCAC Installation and Maintenance Manual
Bastian Solutions	RLSAC Installation and Maintenance Manual
Habasit Holding AG	Habasit Fabric Conveyor Belts Installation and Maintenance Guide (6040)
ABB Motors and Mechanical Inc	Dodge Quantis RHB Installation and Maintenance Instructions (499322)
ABB Motors and Mechanical Inc	Instruction Manual for DODGE® Setscrew, Eccentric Collar, D-Lok, H-E Series, E-Z Kleen, Ultra Kleen and Food Safe Mounted Ball Bearings (MN3016)
ProCal Innovations, LLC (PCI)	INSTALLATION INSTRUCTIONS: XT®, QD®, HE & TAPERLOCK® BUSHINGS (31905)

Table 1: Reference Documents

1 Introduction

Thank you for choosing Bastian Solutions Conveyor. The following manual serves as a guide for installation, part replacement, and general maintenance for your material handling equipment. It is important to read the manual and follow any instructions as it provides important safety information for personnel and will maximize the longevity of the conveyor.

The information contained in this manual applies only to the products described. Uses, activities, or processes related to installing or maintaining the equipment that are not explicitly described in this manual are considered out of scope. Please contact Bastian Solutions Conveyor for any questions or support that is not clearly addressed in this document. Bastian Solutions Conveyor is not responsible for misuse of the equipment described in this manual or misuse of information in this manual. If you have any questions, contact Bastian Solutions Conveyor Customer Service or Support at ConveyorSupport@BastianSolutions.com.

2 OSHA and Safety

Bastian Solutions Conveyor is not responsible for ensuring that conveyors used in a system abide by OSHA standards. Safety is of primary importance to our company, but as a product distributor we ask that system integrators and end users conform with all applicable OSHA standards. We encourage that all warnings in this manual are followed to avoid unnecessary risk.

3 Model: RLVAC

3.1 Overview

The Roller Live AC (RLVAC) conveyor is designed for longer runs of transport conveyor in applications which require rollers instead of belted transport. RLVAC uses a continuous belt under the conveying rollers driven by an AC gearmotor, which is engaged with the various conveying zones by means of adjustable spring tension.

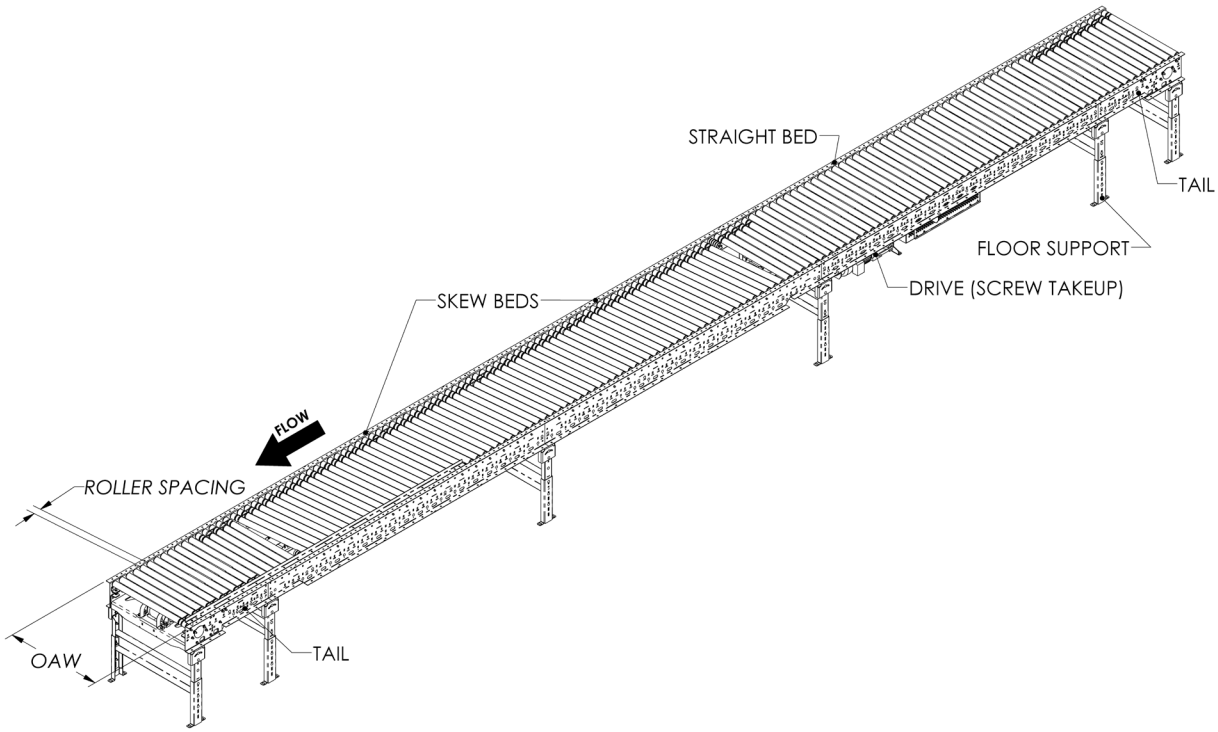

Figure 1: RLVAC Overview

3.2 Belt

The main conveying belt is 99mm wide and is available with two different joining options.

The laced belt is quick to install and quick to repair, and does not require special tools or expertise with the lacing factory installed. It is well suited for any conveyors within its load capacity (light to medium product loads, or heavy loads on shorter conveyors).

The hot-spliced belt requires special tools and skills to create splices, and cannot be installed or replaced as rapidly due to the minimum time for the splices to heat and cool. However, it is a more durable option that is necessary for very heavy loads (working strength of the hot splice is about 2.7 times the working strength of the lacing) and is maintenance-free for the life of the belt. The hot-spliced belt is also quieter because there is no metal lacing contacting the conveying rollers.

3.3 Drive Section

Two different drive designs are available for RLVAC conveyors. The screw (fixed) takeup drive is the least expensive option and is available for conveyor lengths up to 100 ft and total product loads up to 1050 lbs with a laced belt or 3200 lbs with a hot-spliced belt. Because the screw takeup drive is manually

tensioned, it requires periodic tension adjustment as the belt elongates. See Table 6: Recommended Preventative Maintenance Schedule in section 6.2 for the required belt retensioning frequency.

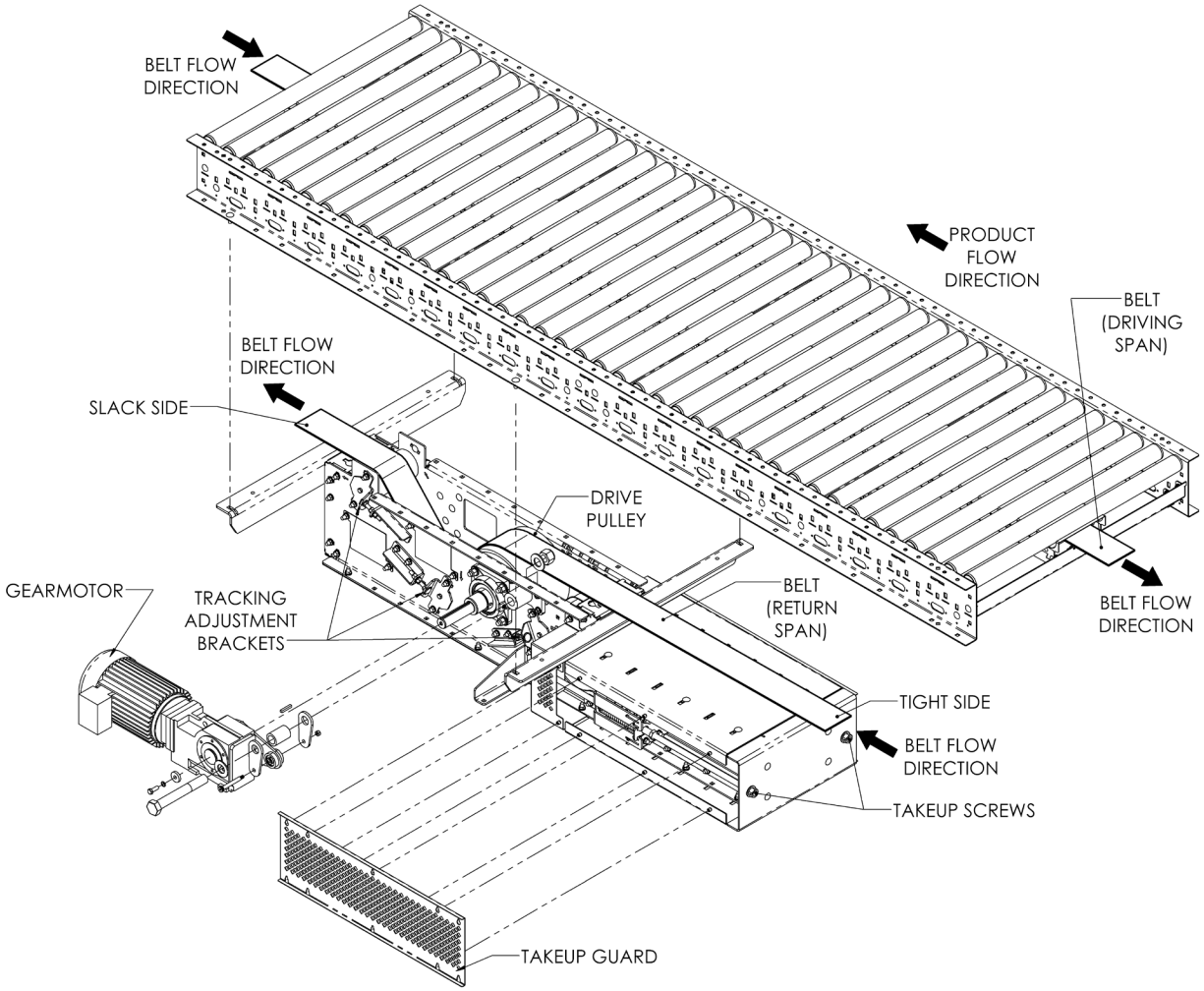

Figure 2: Screw Takeup Drive Overview

The pneumatic takeup drive offers a low-maintenance automatic tension adjustment and a longer belt takeup distance for conveyor lengths up to 200 ft, or heavily-loaded conveyors. Since the pneumatic takeup automatically adjusts belt tension based on the conveyor load, it can handle heavier total product loads, up to 1900 lbs with a laced belt or 4100 lbs with a hot-spliced belt.

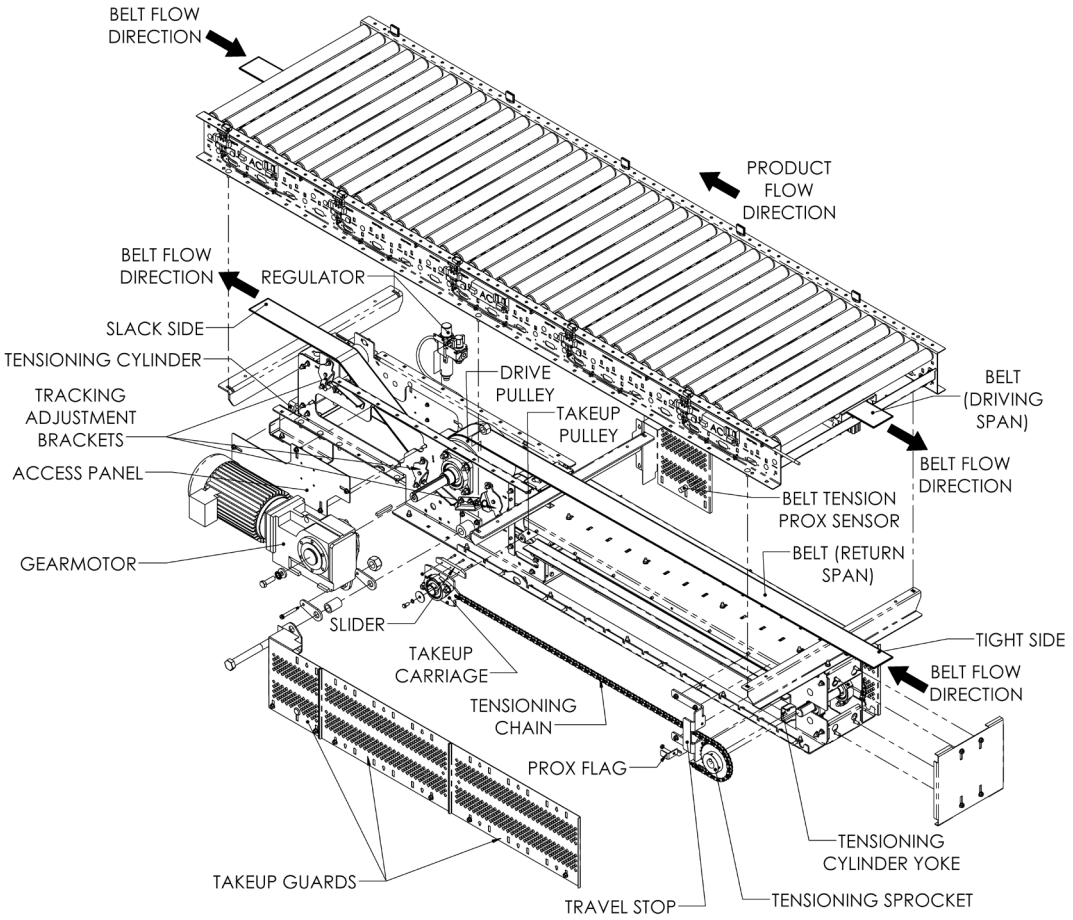

Figure 3: Pneumatic Takeup Drive Overview

3.4 Tails

The RLVAC tail section is a 36” conveyor section that contains the tail pulley and a snub roller. The tail sections are always placed as the first and last bed sections in an AC mark number. Rollers in the tail section are banded together to transmit power from the live zone in the section to the rollers above the tail pulley.

Optional power takeoff (PTO) timing pulleys may also be installed on a tail section to drive an additional conveyor section from the belt of the RLVAC conveyor.

3.5 Intermediate Beds

Intermediate beds contain one or more live roller zones and modules. An intermediate bed consists of conveying rollers on the top, with pressure rollers mounted in modules below. The belt will be routed between the conveying rollers and the pressure rollers during installation. See Figure 4: RLVAC Intermediate Bed Exploded View for details.

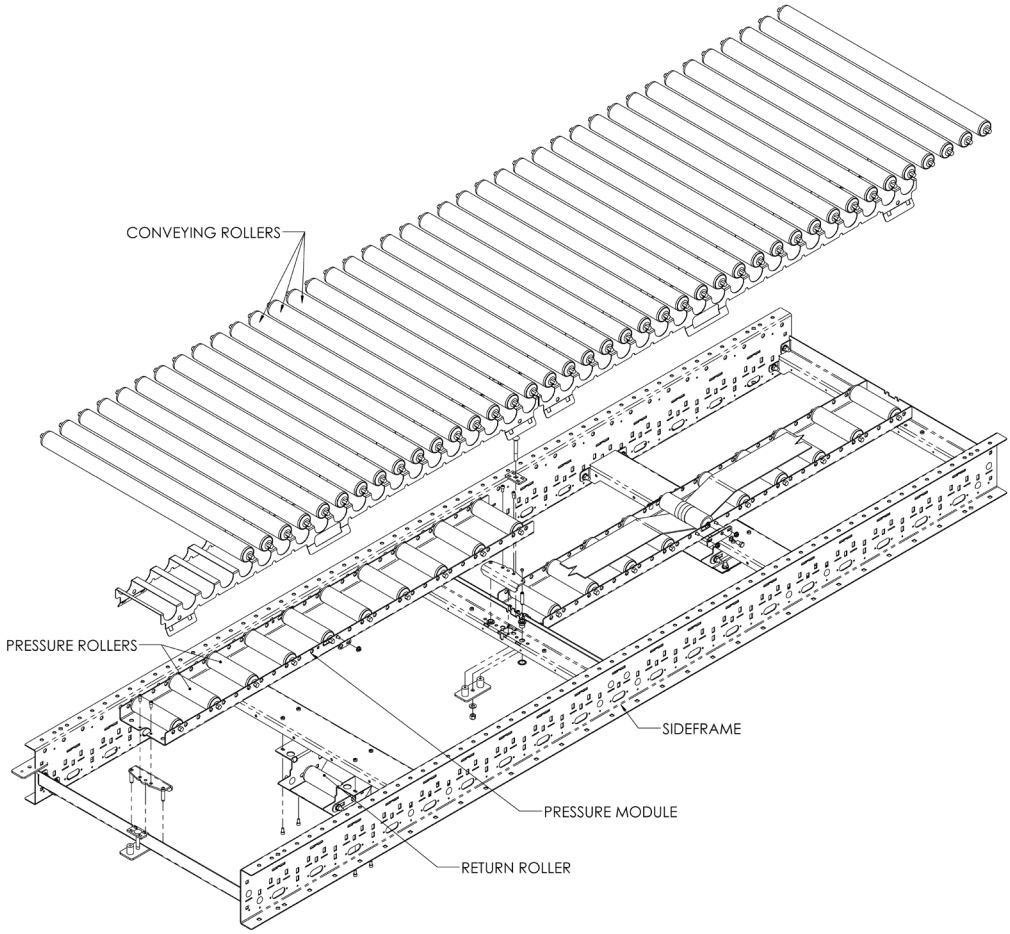

Figure 4: RLVAC Intermediate Bed Exploded View

3.6 Skew Beds

Skew beds are a specific type of intermediate bed with a deeper sideframe. Instead of driving the conveying rollers directly, the belt drives intermediate idler rollers which are each banded up to several skewed conveying rollers. The start and end of the skew section contain short sections of straight banded conveyor which is banded to the bed section before or after the skewed section, to allow for the routing pulleys that redirect the belt. This arrangement prevents tracking and belt wear issues that would be caused if the belt ran directly on the skewed conveying rollers.

Other than the difference in roller spacing caused by the extra layer of rollers, the modules in a skew bed function the same way as in any other intermediate live bed.

NOTE Skew beds are always oriented to skew the product away from the band side.

4 Receiving

Upon delivery of any Bastian Solutions conveyor, please review and check the following:

- The quantity of items received against the Bill of Lading.
- Complete a visual inspection of equipment to determine any damage that may have occurred during shipping. If damage is present, document with pictures.
- Review Mark Number information and layout locations. More information can be found in subsection 4.1.

If there are any missing or damaged components contact your Bastian Solutions Conveyor representative with as much detail as possible. If you are unsure of your Bastian Solutions Conveyor representative, please contact Customer Service at ConveyorSupport@BastianSolutions.com.

4.1 Mark Numbers

A mark number is a specific number given to a piece of equipment. A mark number is usually made up of a single product line (RZPDC, RLVDC, BZPDC, etc.) but can contain many bed section lengths. They can range from two inches to hundreds of feet. The mark number is used to help identify where the piece of equipment will go within the system layout.

Every bed section of conveyor will have (2) stickers. One sticker on the infeed end of the bed, and one sticker on the discharge end of the bed. Each sticker will contain the following information:

- BSC Project Number and Name
- Model Type
- Mark Number
- Match
- Piece
- Flow

Figure 5 shows stickers that would appear on an RZPDC that has two bed sections.

Figure 5: Mark Number Stickers

The match field on the stickers is used to indicate if two bed sections are to be spliced to one another. As shown in Figure 5, the stickers where the two beds splice together both contain “Match: 1”. The piece field defines the bed section number within the mark. The flow refers to the direction of product flow along the conveyor system.

4.2 Skid Contents

Skids will contain varying combinations of conveyor sections, support structures, accessories, and pertinent hardware. For protection of product integrity during shipping, accessories and supports may be delivered on separate but labeled skids.

4.3 Skid Documentation

All shipments will contain a Bill of Lading for the delivery company, a skid label, and a skid manifest. Skid labels have the contents of each shipped item located on the skid. Figure 6 shows a sample of a skid label. These stickers are placed on the surface of each skid.

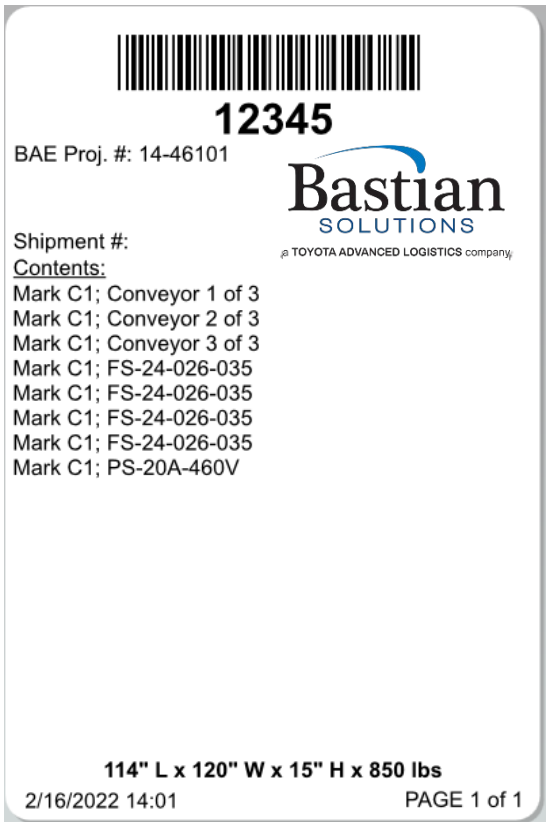

Figure 6: Skid Sticker

RLVAC conveyor may arrive in multiple skids for the same mark number. The number of skids shipped is dependent on the OAW and OAL of the mark number.

Upon receiving the skid on site, please inspect for any visual damage of the equipment. If there are any damages, please contact your BSC representative with images and details of the skid.

5 Installation

5.1 Layout

The installation supervisor on site should have the elevation and layout prints with detailed information regarding the placement of conveyor sections and support structures. This information is not the responsibility of Bastian Solutions Conveyor to provide unless otherwise specified.

1. Clear the workspace around the portion of the layout selected for installation.
2. Ensure that the conveyor and accessory skids containing the correct RLVAC mark number are unpacked and all components are accounted for.
3. Measure out from the constrained origin to start placement of supports. It is recommended that snap chalk lines are used, or other methods of keeping a consistent line.

A straight and level installation is crucial to proper belt tracking. The extra time spent creating an accurate layout will more than pay for itself in time saved during belt tracking and troubleshooting.

4. Use the elevation layouts to determine the top of conveyor surface and the incline/decline angle of a mark section.
5. Place the support type that the layout designates.
6. Check the approximate height of each support and adjust if necessary. Final heights will be set after the supports and conveyor are installed.

5.2 Setting the Conveyor

1. Check the flow direction on the mark stickers to ensure that conveyor is installed in the correct order and that each section is facing the correct direction.
2. Starting from one end, place the conveyor onto the support structure and fasten with 3/8”-16 carriage bolts and serrated flange nuts.
3. Install a splice plate underneath each top flange at the bed break with 5/16”-18 hex bolts and serrated flange nuts. Use the splice plate to align the mating sideframes vertically and horizontally. See Figure 7: Floor Support and Splice Plate Installation.
4. At each section break, install a pressure assembly. See section 5.3 for details.
5. Before moving on to the next section, torque the 5/16” splice plate fasteners to 17 ft-lb and the 3/8” floor support fasteners to 31 ft-lb.

Do not lift the drive section of the conveyor using the lifting lug on the AC motor and gearbox. This will cause damage to the gearbox and drive pulley.

6. Check that the upstream and downstream heights of the conveyor section agree with the system layout instructions and that the conveyor is leveled side-to-side.
7. Check that all floor supports are aligned with the chalk line or other layout mark to ensure that the conveyor is straight.
8. Secure the supports to the floor (or other permanent fixture).

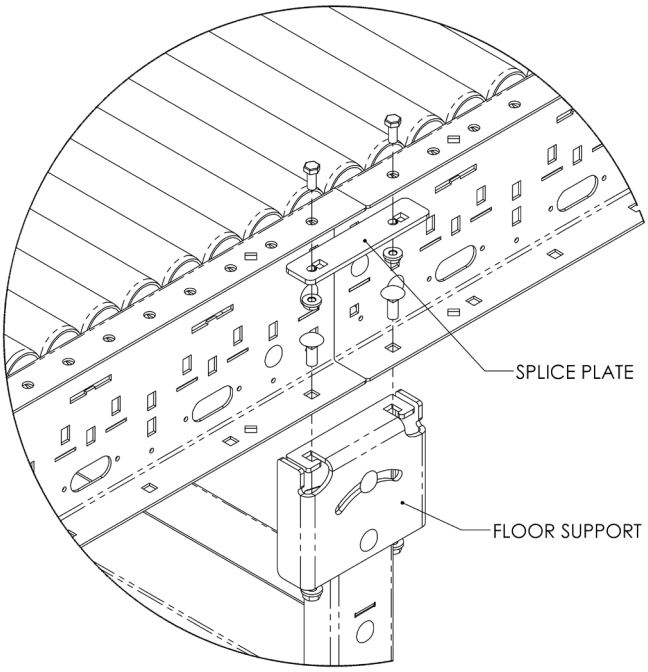

Figure 7: Floor Support and Splice Plate Installation

NOTE

Refer to the "Bastian Solutions Conveyor Support Installation Manual" for more information on installing conveyor.

5.3 Pressure Assembly Installation

1. RLVAC conveyor modules are pushed against the belt by pressure assemblies in between each module. The pressure assemblies between modules in the same bed section are pre-installed, but pressure assemblies between bed sections must be installed as the bed sections are set.
2. See Figure 8: Pressure Assembly Installation Detail for a section view showing a pressure assembly between bed sections. Also see Detail A of Figure 28: General Arrangement, RLVAC Bed Section, Sheet 2 of 2 in Appendix 2: General Arrangement Drawings for additional details.
3. Remove either the upstream or downstream conveying roller (1) immediately next to the bed break. Drop in an upper pressure plate (76) and a 3"L carriage bolt (77). The upper pressure plate sits in notches in the two bed spacers.
4. Push a spring pressure plate assembly (80) up through the holes in the bed spacers. The rubber springs will press over the two protruding pins on the two modules. Ensure that the carriage bolt passes through the hole in the pressure plate assembly.
5. Install a washer (78) and nylock nut (79). Hand tighten only at this stage. Overtightening will make the belt difficult to install.
6. If the conveyor contains one or more skewed beds, the transitions to those skewed beds get a special one-sided lower pressure plate (83). The remainder of the pressure assembly is installed the same as on non-skewed beds. See Figure 9: Skew Transition Pressure Assembly Detail. For additional context, this detail is "Detail B" in Figure 16: Skewed Bed Belt Routing, in section 5.5.3.
7. Replace the removed conveying roller.

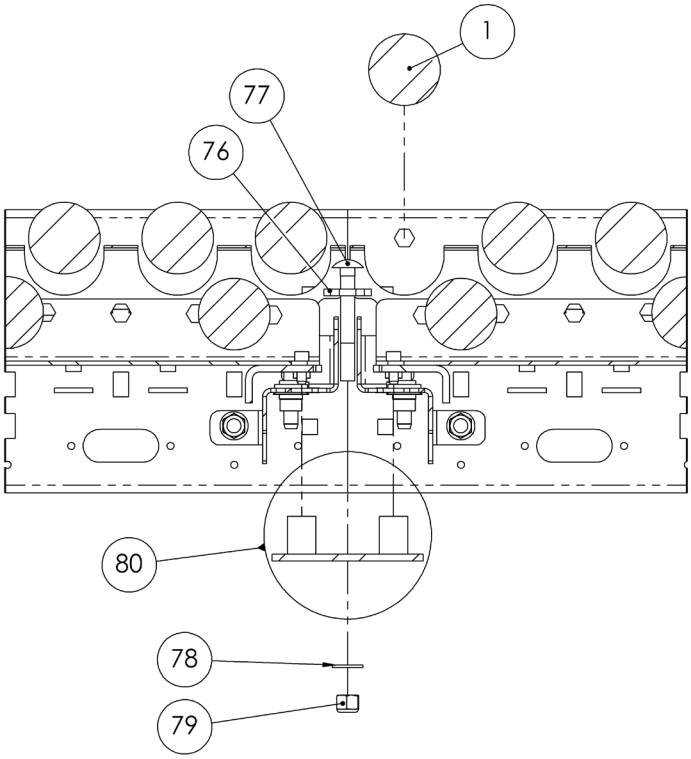

Figure 8: Pressure Assembly Installation Detail

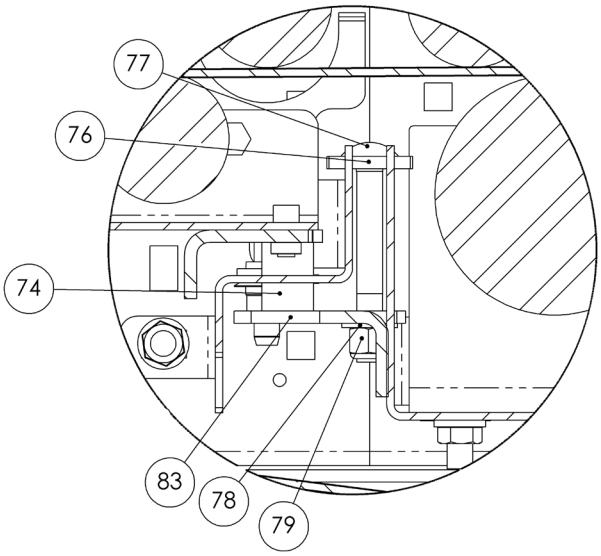

Figure 9: Skew Transition Pressure Assembly Detail

5.4 Leveling and Straightening

1. Starting at one end, use a laser level or other accurate method to check the sideframe height at each bed break on both sides of the conveyor, and adjust the supports as needed. All bed breaks should be in the same plane and level side-to-side, +/- 1/16”.

2. Run a string line along the centerline of the conveyor, down its entire length, approximately 2” above the rollers. Tension the string until it is freely suspended (not touching any rollers).
3. Measure the distance between the string and the edge of the sideframe at each bed break. The distance should be the same at every bed break, +/- 1/8”. Adjust by loosening the support anchoring bolts and sliding the entire floor support sideways if needed. The floor support anchoring holes are slotted to allow some side-to-side adjustment. Re-secure the support once it is in position.

5.5 Installing the Belt

1. Remove a few idler rollers near each tail, and approximately every 50 feet along the length of the conveyor, as needed to pull the belt through. See section 6.7.4 for details.
2. Mount the roll of belting on a sturdy pole or axle, secured between the tines of a forklift or similar, where the belting can be easily unrolled. Position the belt behind the tail of the conveyor nearest the drive.

NOTE

The belt should be installed with the shiny traction layer facing up towards the conveying rollers and the textured or fabric side down towards the pressure rollers. For belts with traction material on one side only, this orientation is important for correct functionality. For belts with traction material on both sides, keeping the shiny layer towards the conveying rollers will reduce noise.

3. Tape a thin piece of metal or stiff cardboard to the end of the belt to keep the end straight and help guide it through the conveyor. Make sure the final thickness is less than 1/4”.

NOTE

If the belt is prepared for a hot splice joint, it will have a small scrap of belting taped to the end to protect the finger joint. Leave that piece of belting in place.

4. Once the belt reaches the other end of the conveyor, route it through the tail and pull the belt through, leaving the return span hanging below the conveyor.
    a. See Figure 10: Tail Belt Routing for belt routing through the tail.
    b. Ensure that the return span of the belt is routed above any items (floor support cross braces, conduits, etc.) that might cross underneath the conveyor.
5. If the conveyor has skewed beds, see section 5.5.3 for belt routing through skewed beds.
6. Once the end of the belt reaches the drive, pull additional belt through until the roll is empty. Position the end of the belt on the top of the conveyor in a convenient place to join the belt ends.
7. Route the belt through the drive. See sections 5.5.1 or 5.5.2 for belt routing, depending on whether the conveyor uses a screw takeup or pneumatic takeup drive.
8. Route the belt through the second tail and bring the two belt ends together.
9. Remove tape from the belt.
10. See section 5.5.3 if the belt uses a hot spliced joint.

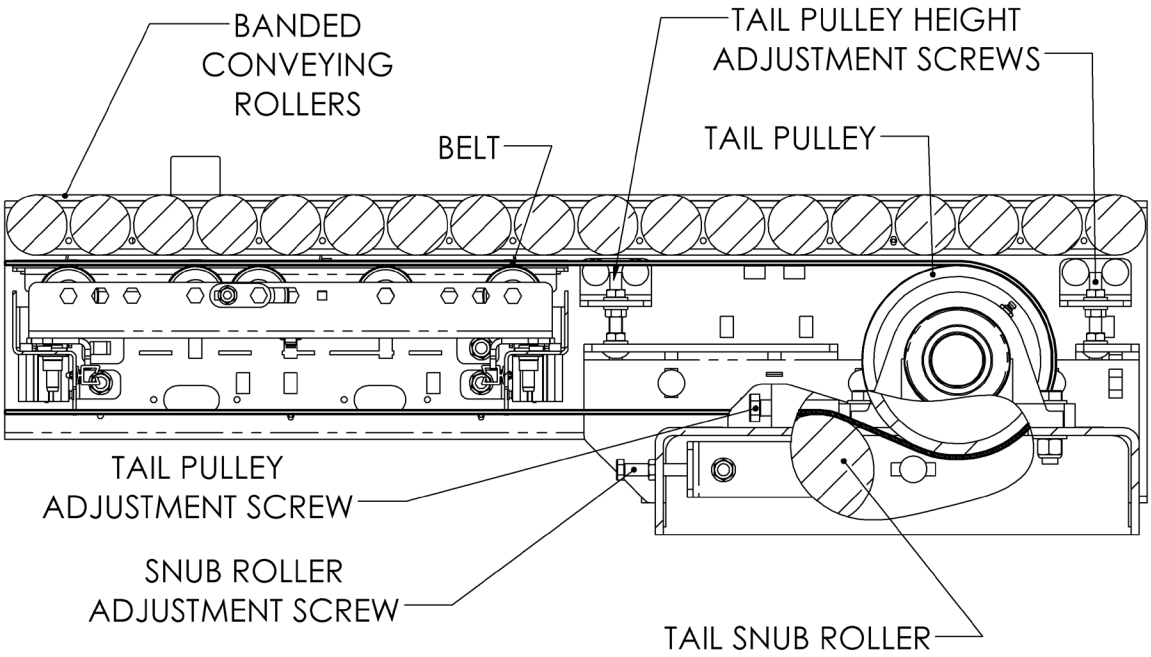

Figure 10: Tail Belt Routing

11. If the belt uses a laced joint, both ends should ship from the factory prepared with lacing.
    a. Bring the two ends together and insert the lacing pin.
    b. Trim the lacing pin approximately ½" to 1" longer than the belt on both sides.
    c. Fold the end of the pin over and tuck it into the lacing on the upstream side of the belt. Note that the belt moves opposite of product flow, so the upstream side of the belt is towards the discharge end of the conveyor, if the belt splice is on top. See Figure 11: Belt Lacing.

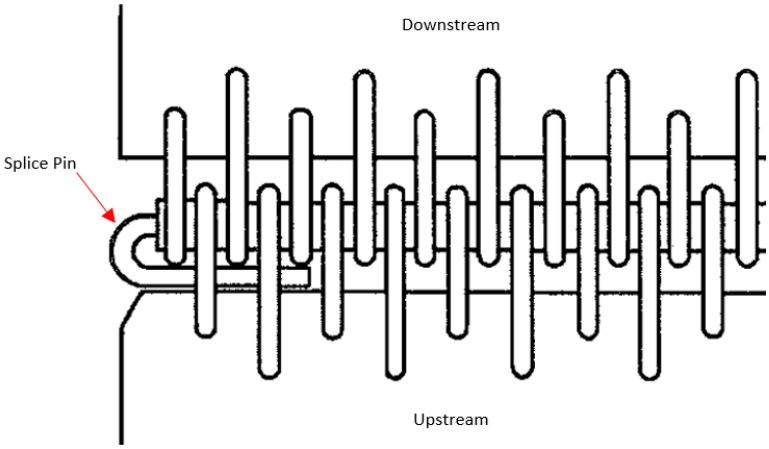

Figure 11: Belt Lacing

5.5.1 Belt Routing: Screw Takeup Drive

1. Remove the takeup guards on both sides of the drive. Remove the access panels on the drive side opposite the gearmotor. See Figure 12: Screw Takeup Drive Overview.
2. Loosen the takeup jam nuts until the takeup screws turn freely. Turn the takeup screws counterclockwise until the takeup carriage is as close to the drive pulley as it will go, without

unthreading the tensioner brackets from the takeup screws. Both screws must be turned by the same amount to keep the takeup carriage square inside the drive. See Figure 31: General Arrangement, Belt Under Roller AC, Screw Takeup Drive, Sheet 1 of 1 in Appendix 2: General Arrangement Drawings for details and exploded views.

3. Check that both routing rollers and the drive snub roller are set square to the drive frame and approximately centered within their slots. Adjust if necessary before the belt is installed. Using the routing shown in Figure 13: Screw Takeup Drive Belt Routing, thread the belt through the drive. The drive pulley will not turn easily with most gearmotor selections, so the belt will need to be “pushed” rather than “pulled” past the pulley by providing slack just before the pulley.
4. Do not tension the belt at this stage. Refer to section 5.12.1 for belt tensioning and reassembly instructions.

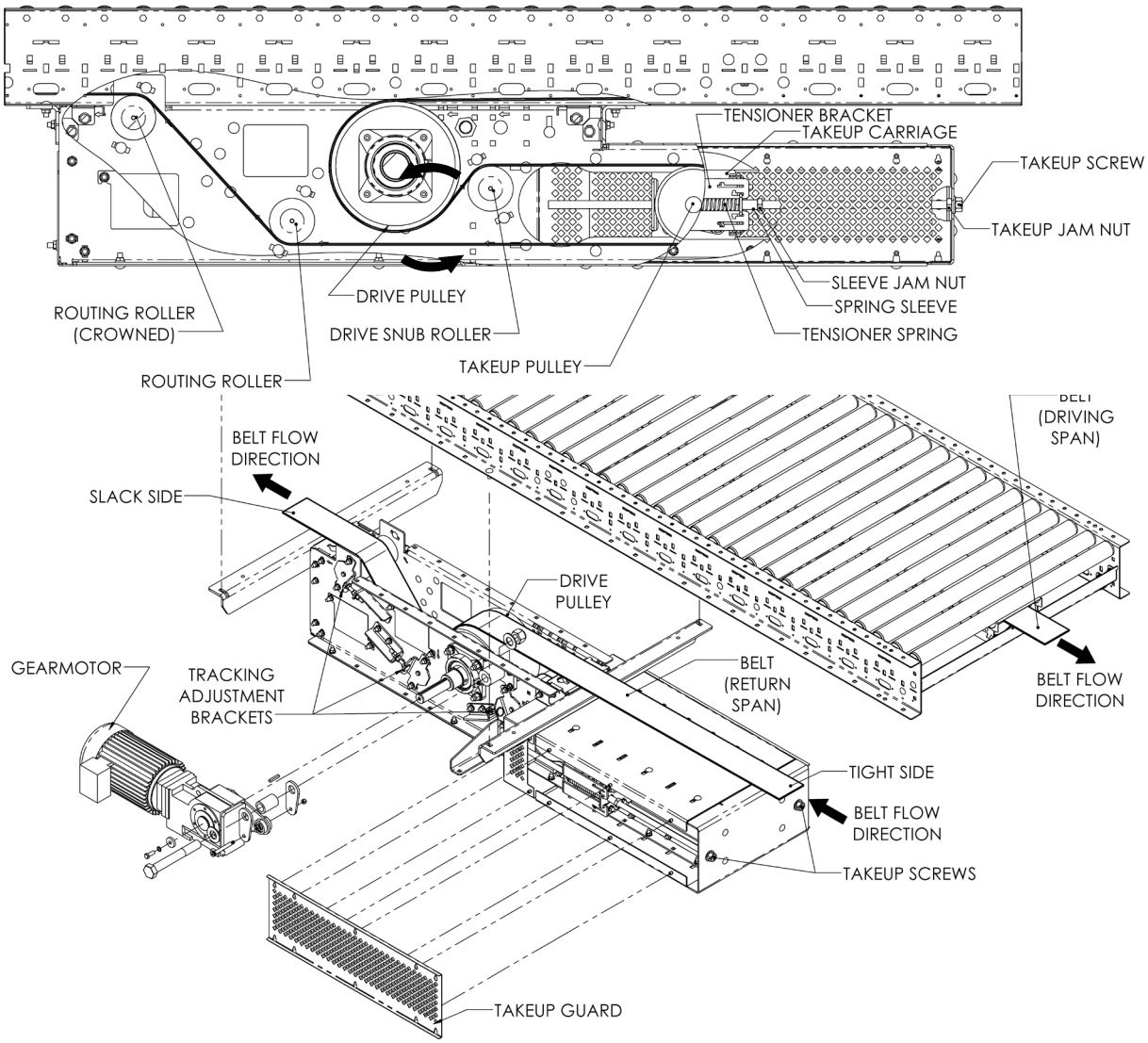

Figure 12: Screw Takeup Drive Overview

Figure 13: Screw Takeup Drive Belt Routing

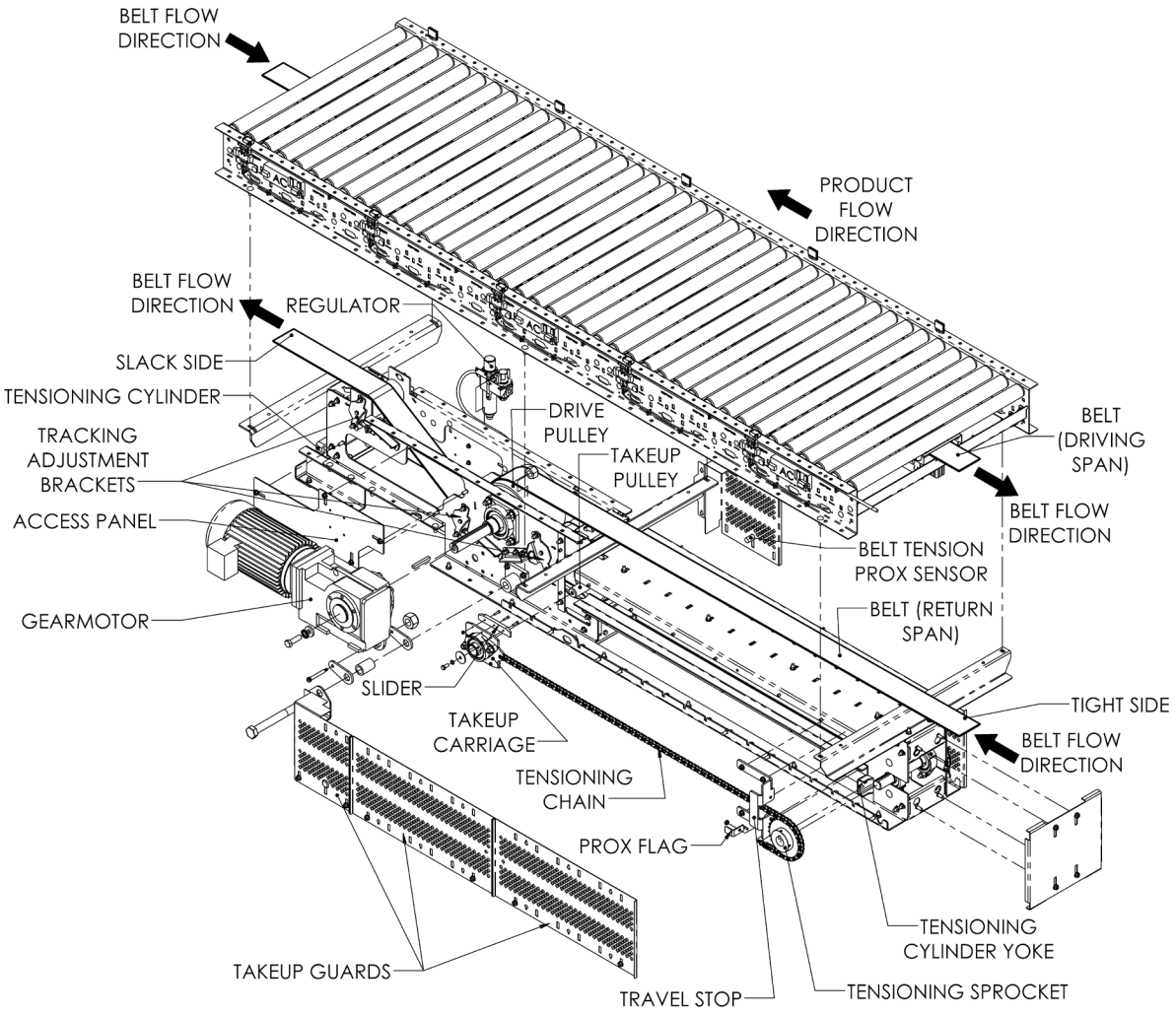

Figure 14: Pneumatic Takeup Drive Overview

5.5.2 Belt Routing: Pneumatic Takeup Drive

1. Remove the takeup guards on both sides of the drive. Remove the access panels on the drive side opposite the gearmotor. See Figure 14: Pneumatic Takeup Drive Overview.
2. Pull the takeup pulley as close to the drive pulley as it will go. This will result in the tensioning cylinder extending fully. See Figure 30: General Arrangement, Belt Under Roller AC, Pneumatic Takeup Drive, Sheet 1 of 1 in Appendix 2: General Arrangement Drawings for exploded views and details.
    a. If the takeup pulley does not slide freely, temporarily unhook the air hose between the air regulator and the tensioning cylinder to break the vacuum in the tensioning cylinder. Ensure that no dirt or foreign material gets into the air system, and reinstall the air hose as soon as the takeup pulley has been moved.
3. Check both chains on the takeup pulley to ensure they are laying flat and are both the same distance from the end sprockets. If one of the chains has skipped a tooth, the takeup pulley will pull to one side and the belt will be impossible to track.
4. Check both chain anchors where they attach to the tensioning cylinder yoke. Both chains should be the same distance from the yoke, which will ensure the takeup pulley stays square.

5. Check that both routing rollers and the drive snub roller are set square to the drive frame and approximately centered within their slots. Adjust if necessary before the belt is installed.
6. Using the routing shown in Figure 15: Pneumatic Takeup Drive Belt Routing, thread the belt through the drive. The drive pulley will not turn easily with most gearmotor selections, so the belt will need to be “pushed” rather than “pulled” past the pulley by providing slack just before the pulley.
7. Reinstall all the guards that were removed.
8. Do not tension the belt at this stage. Refer to section 5.12.2 for belt tensioning instructions.

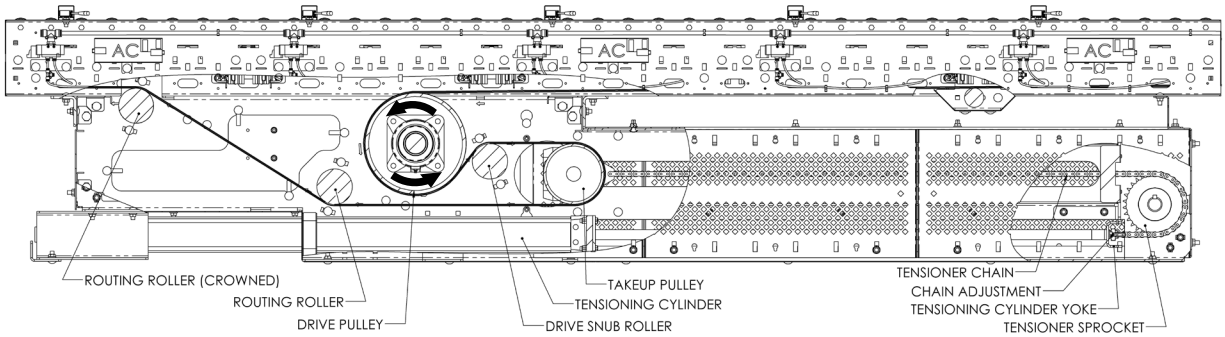

Figure 15: Pneumatic Takeup Drive Belt Routing

5.5.3 Belt Routing: Skewed Beds

1. Remove the banded rollers (22) at the start and end of the skew section to gain access to the routing pulleys.
2. Remove an extra no-groove roller at each end of the skew section, on the adjacent beds. These will be replaced with the extra grooved rollers and bands which ship with every skew section.
3. Route the belt underneath the crowned routing pulley (81) and over the two straight routing pulleys (37). See Figure 16: Skewed Bed Belt Routing for details.
4. Route the belt between the pressure module rollers (2) and the lower, non-skewed driving rollers (22). If the skew section is very long, it may be helpful to remove a few conveying rollers in the center of the section for access.

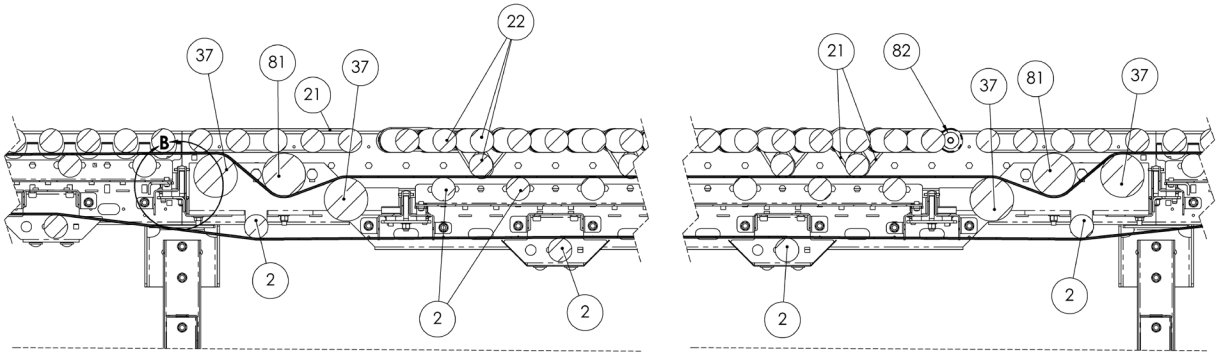

Figure 16: Skewed Bed Belt Routing

5. At the other end of the skew section, route the belt underneath the crowned routing pulley (81) and over the two straight routing pulleys (37), then continue routing the belt through the remainder of the conveyor.
6. On the belt return span, the belt passes underneath the two fixed narrow rollers (2) which adjust the height of the belt return path. Belt return assemblies on either side of the skew section constrain the belt return (installed after the belt is fully routed).

7. Replace the removed banded rollers (22) and bands (21) at the start and end of the skew section. Ensure that a single extra grooved roller is added on each end so that the short non-skewed section is banded to the adjacent bed.

5.5.4 Belt Hot Splicing

1. If the belt uses a hot spliced joint, it will ship from the factory with prepared 10x80mm finger joints cut at both ends. A scrap piece of belting will be taped to the finger joint to protect the fingers during belt install.
2. See Table 2: Belt Hot Splicing Tools for a list of needed tools and suggested part numbers.
    a. The hot press is required for belt splicing. Other models of hot press may be substituted as long as the platen is large enough to accommodate the complete splice and the press can be set to the correct temperature and pressure settings. Reference the user manual of your hot press for appropriate operation instructions.
    b. The guide block is required for belt alignment in the hot press. The listed part number is specially designed for precise alignment. If other styles of guide block are used, great care will be required to make sure the splice is straight.
    c. The die cutter is a recommended tool in case the splice made with the prepared finger joints needs to be re-done. Other models of die cutter may be substituted as long as they can cut the required 10x80mm finger joint in a 4” (100mm) belt width. Reference the user manual of your die cutter for appropriate operation instructions.
3. It is recommended that sites with a large number of hot-spliced belts own the tools in Table 2: Belt Hot Splicing Tools for maintenance and repair purposes. Sites with only a few hot-spliced belts may choose to hire a local belt service company instead of investing in the tooling and required expertise.

Belt hot splicing requires significant expertise and skill to achieve a fully fused, straight result. It is strongly recommended to make several practice splices with scrap belting before attempting to make a finished splice on a conveyor, if the operator does not already have experience in hot splicing belts.

Table 2: Belt Hot Splicing Tools

TOOL NAME	PURPOSE	HABASIT PART NUMBER
Die Cutter	Preparing finger joints	AF-100/US-80
Hot Press	Fusing the splice	PF-101
Guide Block	Belt Alignment	GR101-100C

4. Before beginning the hot splicing procedure, double check that the belt routing is correct and that the shiny side of the belt is facing up towards the conveying rollers.
5. Position the belt ends on top of the conveyor in an accessible location. Remove conveying rollers until there is room to work. Insert a piece of plywood or heavy cardboard under the belt to provide a flat working surface.
6. Remove the tape protecting the finger jointed belt ends.
7. Before separating the finger joint, use an accurate square to mark several closely spaced lines across the center of the fingers on each belt end, perpendicular to the belt travel. These lines will be used later to align the splice.
8. Using a sharp knife or razor blade, cut any remaining fibers holding the finger joint together. Be careful not to cut into the fingers themselves. Do not pull the waste end off the finger joint until all fibers are severed.
9. Adjust the width of the guide block sliders to the width of the belt.
10. Place the guide block on the bottom platen of the hot press, Teflon coated side facing up.
11. Align both halves of the belt splice in the guide block. Adjust the guide block so the splice is centered.

12. Carefully press the splice fingers together until the reference marks are aligned. Accuracy in this step is crucial to making sure the completed splice is straight. See Figure 17: Belt Splice Alignment.
    a. Avoid assembling and disassembling the splice, since rubbing the splice edges will raise the fibers and make it more difficult to assemble accurately.
    b. The splice may not close to the full theoretical distance. This is acceptable as long as there are no visible gaps between the fingers. Use the alignment markings to ensure the fingers are inserted the same distance across the width of the belt, as in the lower image of Figure 17: Belt Splice Alignment where the alignment marks line up even though the fingers are not fully inserted.
13. Place the top plate of the guide block on top of the belt splice, Teflon coated side facing the belt. Close the hot press around the guide block assembly, making sure that the belt does not shift.

14. Tighten the press to the specified clamping pressure in Table 3: Belt Hot Pressing Parameters.
15. Adjust the hot press controller to the specified upper and lower platen temperatures and soak time in Table 3: Belt Hot Pressing Parameters, and start the hot press cycle. See the user manual for your hot press for information on how to adjust its parameters.

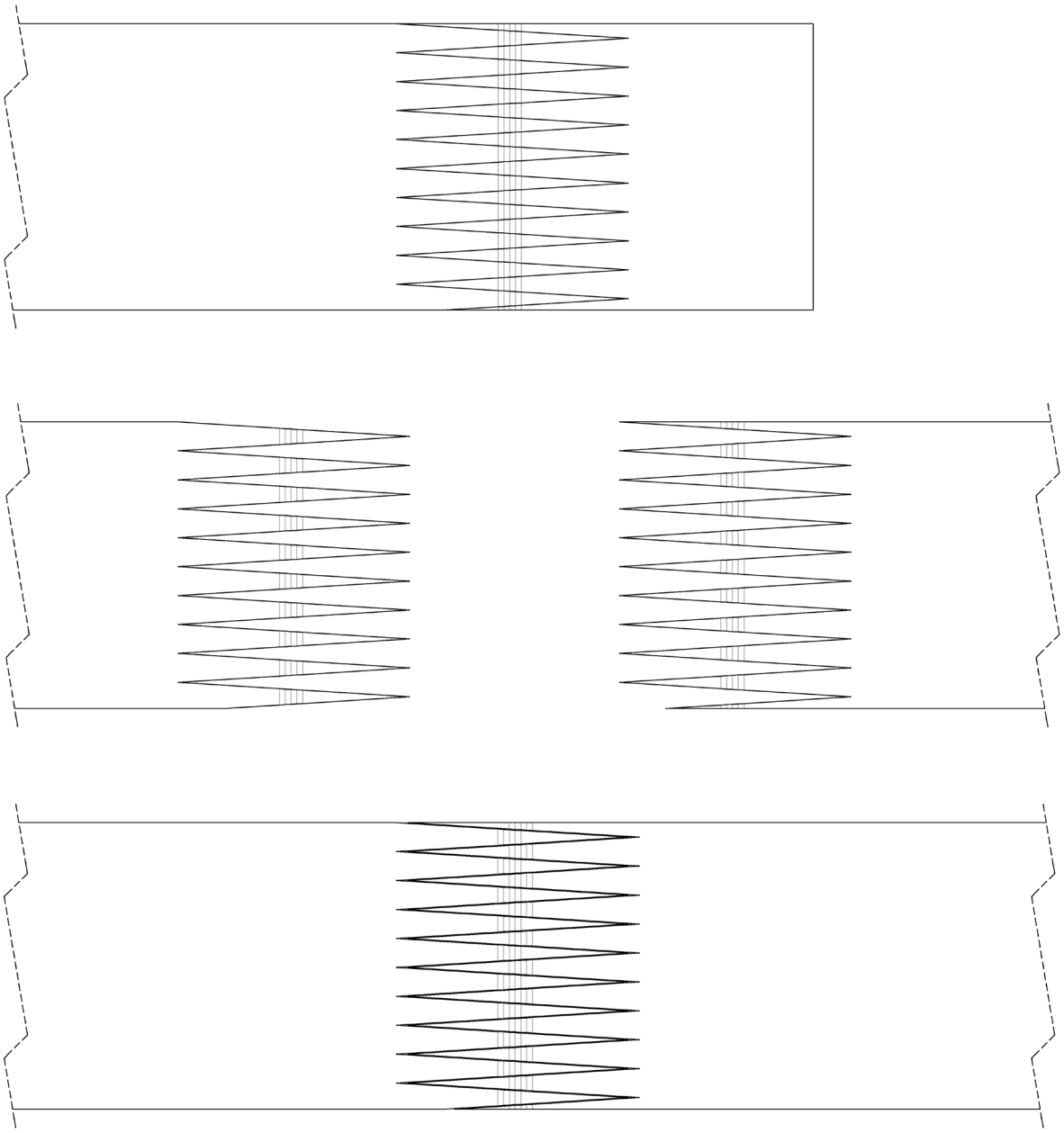

Figure 17: Belt Splice Alignment

Table 3: Belt Hot Pressing Parameters

CLAMPING PRESSURE	UPPER PLATEN TEMPERATURE	LOWER PLATEN TEMPERATURE	SOAK TIME
2 bar	165°C	165°C	999 sec
29 psi	330°F	330°F	

CAUTION The listed belt pressing parameters assume the use of the specified guide block. Different styles or thicknesses of guide block will require adjustment to the heating times. Contact the belt manufacturer for more information on pressing parameters. If the splice is under-fused or over-fused, a weak joint and belt failure in service may result.

16. Once the pressing cycle is complete, allow to cool to 50°C/122°F or lower before opening the press.

CAUTION Opening the press before the splice has cooled fully can cause the splice to distort or compromise its strength, and also poses a burn hazard.

17. Unclamp and remove the press and the guide block from around the belt.

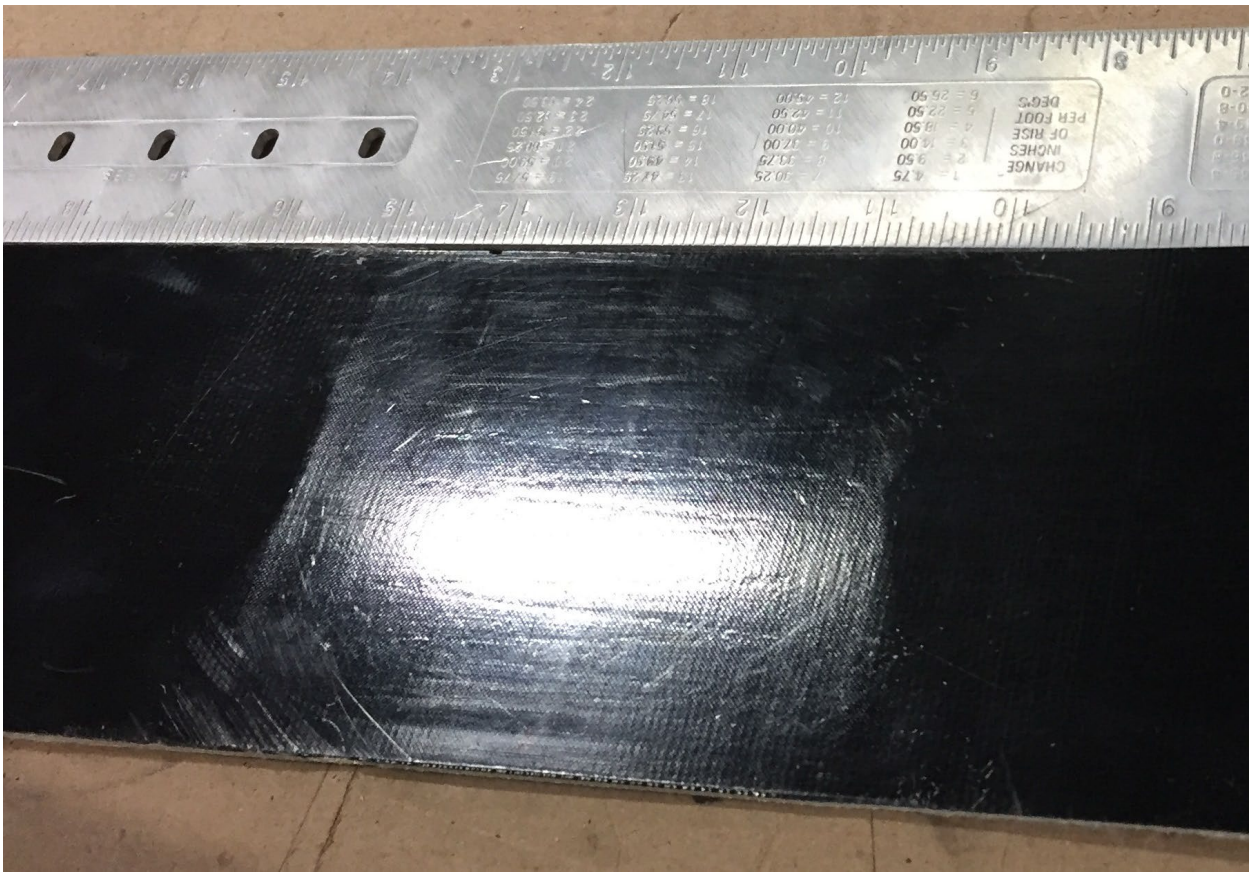

Figure 18: Completed Belt Splice

18. Inspect the splice on both sides of the belt for complete fusion. The outlines of the fingers should be fully fused and barely visible. See Figure 18: Completed Belt Splice for an example of a good splice.
19. With a sharp knife, trim off any flash from the belt edges.

20. Use a long straightedge to check if the splice is straight. For optimal belt tracking, the belt should be straight to within 1/4" per 10 feet (0.002 in/in), measured across the splice.
21. If the splice is not straight enough or if it is incompletely fused, the splice will need to be cut out and a new splice made. See section 18 for instructions on making a new finger joint, then restart the belt splicing procedure from step 7.
22. Remove all tools and equipment from inside the conveyor, and reinstall any carrying rollers that were removed for the splicing procedure.

5.5.4.1 Cutting Finger Joints

1. Before beginning, verify the total belt length. Cutting a finger joint removes a minimum of 8 1/4" of belt material, plus the heat-affected zone of the existing splice if there is one. If the belt will be too short after the joint is cut, an extra section of belting will need to be spliced in to make up the difference.
    a. Best practice in this circumstance is to make the new section of belting at least 3 feet long, so additional future splices can be made if necessary without needing to replace the entire spliced-in section. Each splice is an opportunity to introduce defects (weak spots or curvature in the belt run) so the total number of splices should be minimized.
2. If the belt is already spliced, locate the existing splice and cut across the belt on one edge of the splice with a sharp knife. Ensure the belt is not under tension before cutting.
    a. Belts with a total length longer than approximately 300 feet may have a second, factory splice. In general, the field splice should be removed when re-splicing because it will be of less consistent quality than the factory splice. If both splices are of high quality then either may be removed.
3. Insert one end of the belt into the die cutter.
4. Position the cut area so the entire heat-affected zone from any existing splices will be cut off.
5. Make sure the belt is aligned square with the carriage of the die cutter, then tighten the belt clamps.

NOTE

These instructions assume the use of the die cutter specified in Table 2: Belt Hot Splicing Tools. Reference the user manual for your die cutter, since the operation of the finger cutting and indexing mechanisms may vary.

6. Ensure the die cutter carriage is locked into the first cut location, then pull the punch lever rapidly to cut one finger.
7. Advance the carriage to the next cut location and repeat until all fingers have been cut. Make sure that all fingers are cut fully through the belt.
8. Remove the belt end from the die cutter.
9. Insert the other end of the belt <u>from the opposite side of the die cutter</u> so that the finger location is referencing the same side of the belt.
10. Repeat steps 4 through 8 to cut the fingers into the other end of the belt.
11. If an extra section of belting is being spliced in, repeat steps 3 through 9 with the two ends of the short section of belting. Ensure that orientation is maintained so the fingers line up with the finger joints in the main section of belt.
12. To complete the hot splice, continue with the splicing instructions starting from step 7 of section 5.5.3.

5.6 Installing Return Rollers

Return roller modules are pre-assembled and shipped separately, to be installed after the belt is routed and joined. See item (31) in Figure 19: Return Roller Module Installation Detail.

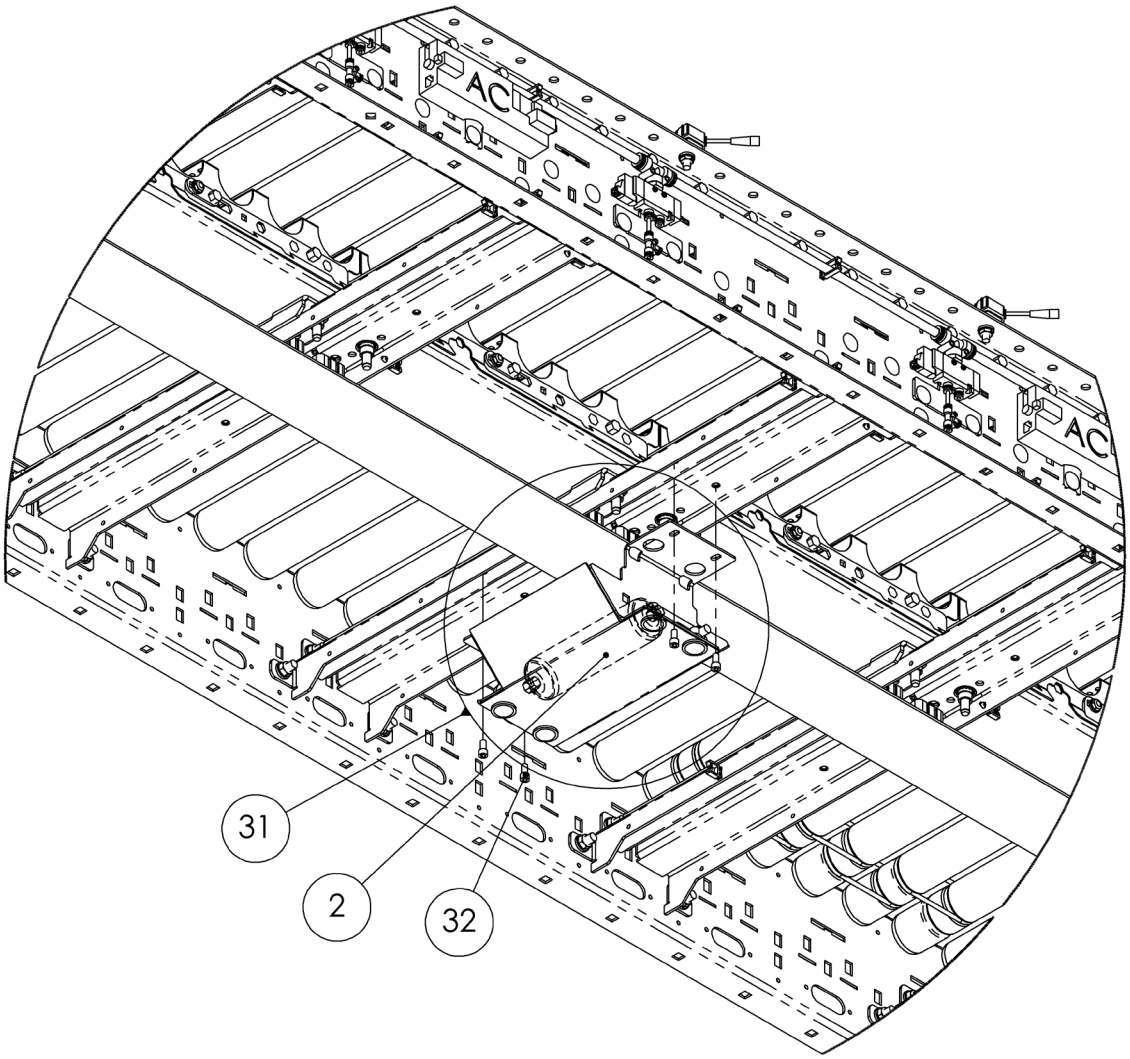

Figure 19: Return Roller Module Installation Detail

1. Return rollers are to be installed in the locations shown in Table 4: Return Roller Positions for Intermediate Beds, measured as distances in inches from the infeed end of the section, on each intermediate bed section.
    a. Sections containing drive modules ship with return rollers pre-installed, and tails do not receive any return rollers.
2. When installing each return roller module, verify that the roller is set square (at one limit of its travel on both sides). The return roller is inside the roller module, indicated by item (2) in Figure 19: Return Roller Module Installation Detail.
3. Place the return span of the belt in between the side panels of the return roller module and lift the module into place.

4. Secure each module with (4x) 1/4”-20 SHCS, item (32) in Figure 19: Return Roller Module Installation Detail. See Table 7: Fastener Standard Torque Values in section 6.3 for tightening torque.

Table 4: Return Roller Positions for Intermediate Beds

ZONES PER BED	1 ZONE	2 ZONES	3 ZONES	4 ZONES	5 ZONES	6 ZONES
18” Zone Length	N/A	18	18	18, 54	18, 72	36, 72
24” Zone Length	N/A	12, 36	12, 60	36, 60	36, 84	
30” Zone Length	N/A	12, 42	12, 72	12, 72		
36” Zone Length	N/A	18, 54	18, 90			
60” Zone Length	30	30, 90				

5.7 Belt Tracking Zones

1. Conveyors with a total length of 60 feet or longer will receive one or more belt tracking zones. The tracking zones are shipped separately as a kit and are field installed.
    a. See the system layout drawing for exact locations of these tracking zones.
    b. Typical tracking zone locations are evenly spaced along the length of the conveyor, with a maximum of 60 feet between a tracking zone and a tail or skew start/end section, or between two adjacent tracking zones.
2. The tracking zone kit consists of a heavy duty roller with adjustment brackets, and carrying rollers and bands to replace the conveying rollers in the zone. See Figure 22: RLVAC Intermediate Bed which shows a tracking zone installed next to a standard zone.
3. Identify the zone(s) to be replaced with tracking zones, and remove all conveying rollers from the zone. Remove the finger guards if the zone has them.
4. Remove the adjustable center pressure roller and brackets (30) from the pressure module.
5. On 2” roller center conveyor, move the fixed pressure rollers nearest the adjustable center roller location to match the roller locations shown in Figure 20: Pressure Roller Locations for 2”RC Pressure Modules. No pressure rollers may be installed within 6” of the adjustable center roller location.
6. Replace the adjustable center pressure roller with the heavy duty roller (23) and brackets (25) provided in the tracking zone kit. Route the belt <u>underneath</u> the heavy duty roller. See Figure 22: RLVAC Intermediate Bed for an example of belt routing.
    a. The tracking bands for the heavy duty roller are item (24). Tracking bands are pre-installed when the heavy duty roller is supplied as part of a belt tracking zone kit.
    b. The hardware included with the tracking zone kit is shown as items (26), (27), (28), and (29). See Table 11: RLVAC General Arrangement BOM in Appendix 2: General Arrangement Drawings for detailed descriptions and part numbers.
7. Adjust the heavy duty roller location to the correct side of the adjustable center roller slot, as shown by the arrows in Figure 20: Pressure Roller Locations for 2”RC Pressure Modules and Figure 21: Pressure Roller Locations for 3”RC Pressure Modules. Ensure the heavy duty roller is square to the pressure module frame by moving it to the end of its travel on both sides, then tighten the brackets and roller fasteners.

8. Reinstall the finger guards if applicable.

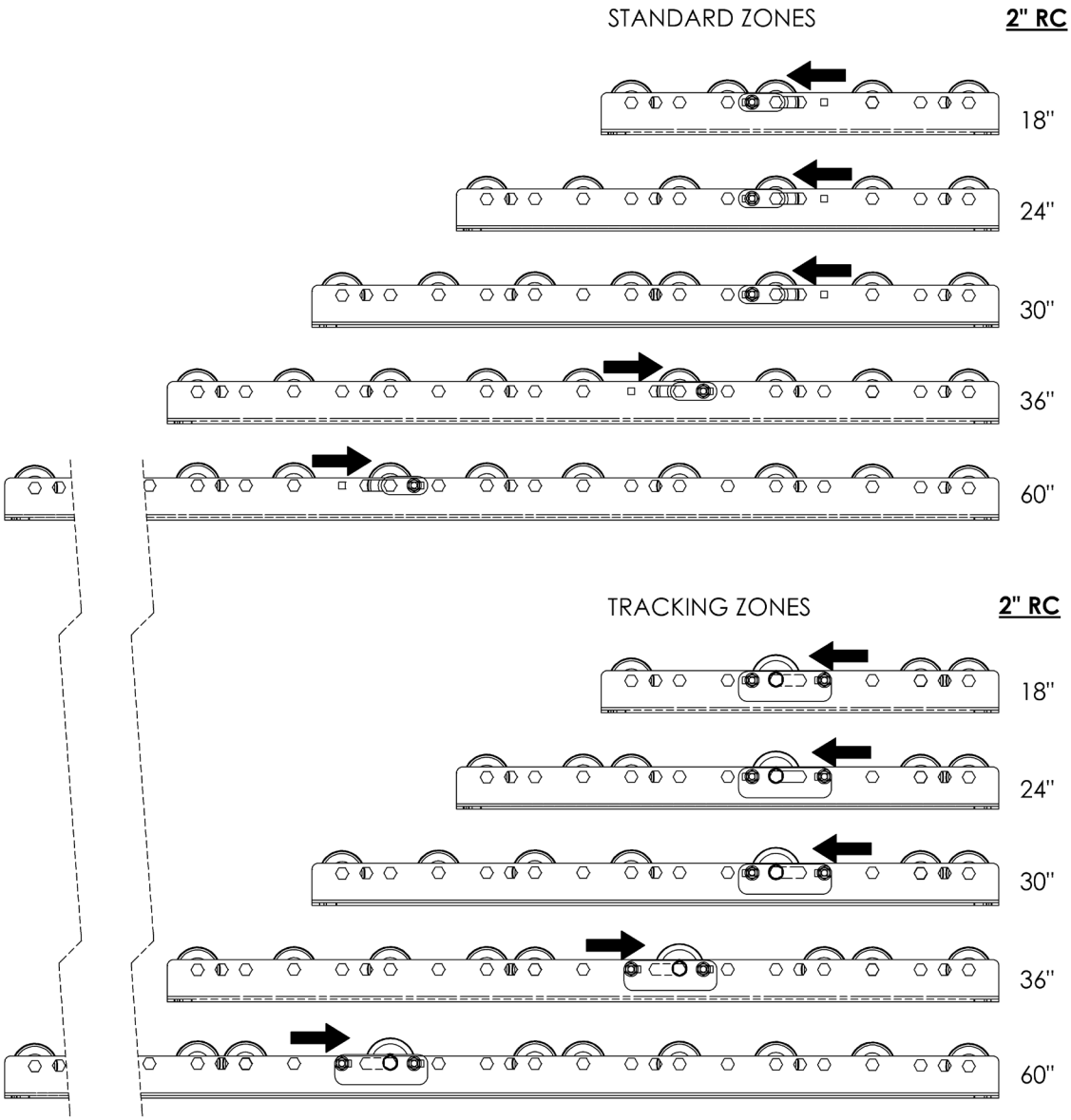

Figure 20: Pressure Roller Locations for 2"RC Pressure Modules

9. Install the new grooved zone rollers and bands on the tracking zone, centered on the heavy duty roller. It is not necessary to band the entire zone together, as long as at least one banded roller engages with the belt on either side of the heavy duty roller. (6 rollers for 3" RC or 8 rollers for 2" RC). The bands may be installed on either side of the conveyor if needed.
10. The non-grooved rollers and pressure roller that were removed during the install process may be added to the system spares.

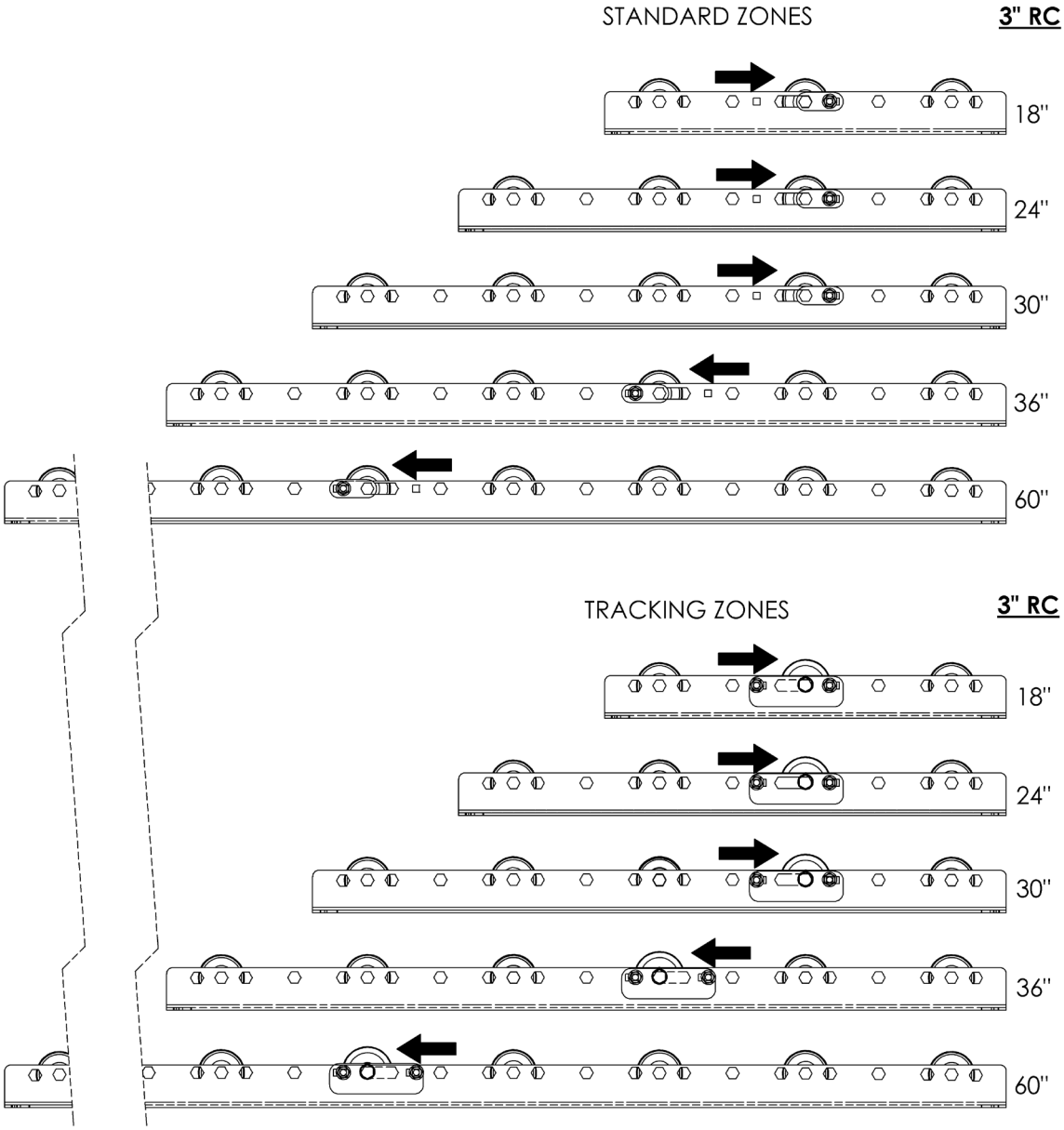

Figure 21: Pressure Roller Locations for 3"RC Pressure Modules

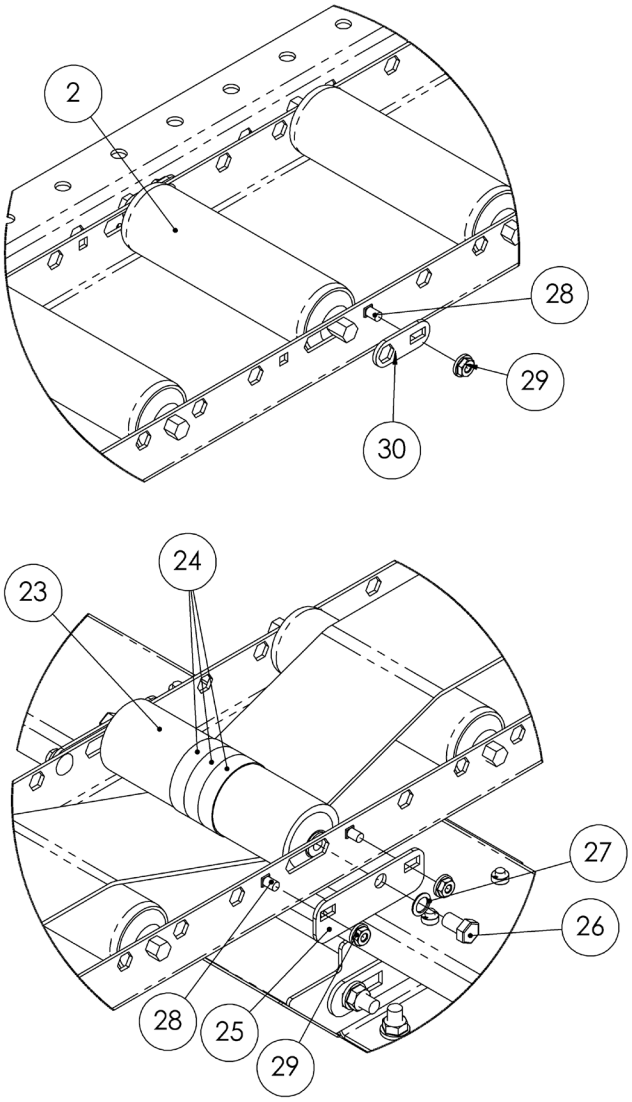

Figure 22: RLVAC Intermediate Bed Tracking Roller Details

5.8 Drive Pressure Adjustment

1. Once the belt is installed and spliced, the pressure assemblies may be adjusted for correct drive pressure.
2. There is a pressure assembly in between each module that requires tensioning. In most cases this will be every 60”, but the pressure module spacing may vary depending on bed length. Tension both the pressure assemblies at each bed break that were installed in section 5.3, and the pre-installed pressure assemblies within each bed section.
3. Fully tighten each pressure assembly nylock (79) until the lower pressure plate (80) contacts the bottom of the bed spacer on both sides. This setting gives maximum drive force, and further tightening will not increase drive. See Figure 8: Pressure Assembly Installation Detail in section 5.3 for details.

5.9 Power Take-Off

NOTE

Reference the BSC installation and maintenance manual for the model type of the driven conveyor (RLCAC or RLSAC) for detailed PTO installation instructions.

1. If the conveyor has a power take-off unit, the tail section will have a special extended shaft tail pulley, and the conveyor will ship with a power take-off kit.
    a. Reference the system layout drawings to mate this power take-off kit to the driven conveyor, which will be a different mark number.
2. Install and set the driven conveyor before beginning to install the power take-off kit. Reference the installation manual for the appropriate model type of the driven conveyor.
3. If the driven conveyor also has a separate power take-off timing pulley, install it before installing the power take-off timing pulley on the driving conveyor. If the driven conveyor ships with the driven timing pulley installed, proceed to the next step.
4. Ensure the tail pulley is square to the conveyor frame before proceeding. Any adjustments made to the tail pulley or tail assembly will also affect squareness and belt tension on the power take-off.
5. Install the timing pulley (38) and key on the extended tail shaft. See Figure 29: General Arrangement, RLVAC Tail, Sheet 1 of 1 in section 9.
6. Use a straight edge to align the timing pulley on the extended tail shaft with the timing pulley on the driven conveyor.
7. Torque the bushing bolts according to the procedure in the PPI bushing installation guide.
8. Reference the BSC RLCAC or RLSAC Installation and Maintenance Manuals for details on PTO tensioner installation and belt tensioning. Installation procedure will vary slightly depending on the model type of the driven conveyor.
9. Install the PTO guard.

5.10 Electrical Installation

5.10.1 AC Motor Installation

1. The conveyor is equipped with a single AC gearmotor, which is typically specified for 230V/460V 3 phase at 60Hz.

CAUTION

Check the motor nameplate/wiring diagram and verify correct winding tap connections for the available operating voltage, prior to any electrical install.

2. For Dodge gearmotor electrical maintenance and installation instructions, refer to document Dodge Quantis RHB Installation and Maintenance Instructions (499322).

CAUTION

Verify correct phase rotation. The conveyor is not designed to run backwards and belt tracking or belt tension issues may result. Correct rotation direction is as shown in Figure 13: Screw Takeup Drive Belt Routing for screw takeup drives, or Figure 15: Pneumatic Takeup Drive Belt Routing for pneumatic takeup drives.

3. The drive motor may be controlled with a VFD, or may be connected directly to line voltage. If a VFD is used, obey the motor manufacturer's listed deratings for operation at speeds other than 60Hz. Contact BSC for more information if needed.
4. If a VFD is used in a closed-loop ("vector") control mode, verify the VFD is tuned to the conveyor system once the belt is tensioned. Longer conveyors have a significant amount of elasticity in the belt span, and this may cause undesirable oscillation when speed or load changes suddenly.

WARNING

VFD settings should only be adjusted by qualified personnel. Improper VFD settings can prevent correct emergency stop operation or cause hazardous unintended motion.

5.11 Accessories

Attach any applicable accessories and connecting hardware (e.g. guiderail) to the mounted conveyor section at this point.

NOTE

Refer to the “Bastian Solutions Conveyor - Side Cover and Guiderail Installation Manual” for more information on installing most accessories.

5.12 Belt Tensioning and Tracking

Belt tensioning procedures are different depending on whether the conveyor has a screw takeup or pneumatic takeup, but belt tracking is performed the same way in all cases.

5.12.1 Screw Takeup Drives

1. Once the belt is installed and joined, and all return rollers and tracking rollers have been installed, then the belt may be tensioned.
2. See Figure 24: Screw Takeup Drive Belt Routing, which is a duplicate of the same figure from section 5.5.1 for easier reference.
3. Ensure the takeup jam nuts are loosened where both takeup screws turn freely.
4. Back off both sleeve jam nuts several inches away from the plastic spring sleeves.
5. Alternately turn the takeup screws clockwise to tighten the belt. It is important to turn both screws the same amount to keep the takeup carriage square to the frame and prevent it from binding.
6. As the takeup carriage moves away from the drive pulley, the spring sleeves will move with it. Periodically check and back off the sleeve jam nuts as needed to provide space for the sleeves to move.
7. Once the belt starts getting tight, monitor the tension indicators on the takeup brackets for appropriate tension.
8. If the belt is joined with lacing, use the inner set of tension window indicators. If the belt is joined with a hot splice, use the outer set of tension window indicators. See Figure 25: Tension Indicators.

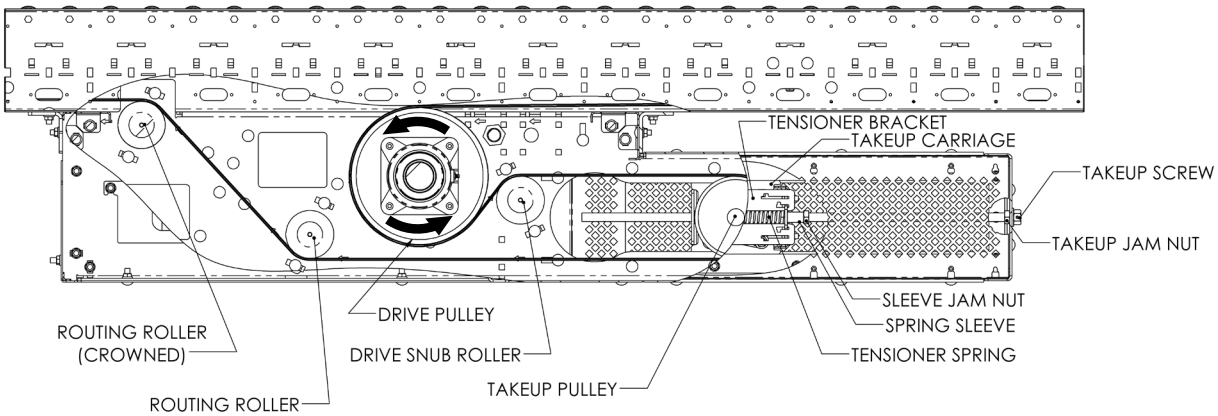

Figure 23: Screw Takeup Drive Belt Routing

9. For the first installation of a new belt, tighten until the spring side of the tension indicator is aligned with the very end of the indicator window (indicated by “maximum tension” in Figure 25: Tension Indicators). The belt will stretch during its initial run-in period and setting a higher initial tension will reduce the number of times it needs to be re-tensioned.

CAUTION

Do not exceed the “maximum tension” indicator setting for the relevant belt splice type. Damage to the belt or belt splice may result.

10. After tensioning the new belt, check and adjust the tension after an initial run-in period of 4 hours.

CAUTION

Use care if the conveyor will be heavily loaded during this first 4 hour run-in period. If the belt tension drops too far, it can slip on the drive pulley, which will damage the belt facing if the slippage is not immediately corrected. For applications where heavy loads are expected immediately after belt installation, it may be necessary to monitor and re-tension the belt one or more times during the run-in period.

11. For adjusting tension or re-tensioning an existing belt, tighten until the tension indicator is within the raised portion of the indicator window (indicated by “target tension” in Figure 25: Tension Indicators).

NOTE

The tension indicators will only display correct tension when the belt is at rest and unloaded. When the belt is moving with a load on the conveyor, belt tension will read lower than its actual (static) value.

12. Measure between the tension indicator and the edge of the drive frame on each side of the drive. If the takeup carriage is not square to the frame, this distance will be different on one side. Adjust and correct until the distances are equal.
13. Lock the takeup screws in place by tightening the takeup jam nuts on each side.
14. Snug the sleeve jam nuts against the spring sleeves on each side. Do not overtighten or the ends of the spring sleeves can be damaged.
15. Reinstall the takeup guards and the yellow access panels that were removed in section 5.5.1.
16. Once the conveyor is running, check belt tracking through the drive. If adjustments are necessary, it is recommended to adjust the tracking bracket on the non-motor side only for easier access.
17. If the belt is not centered when it enters at the drive pulley, it will be necessary to fix the belt tracking upstream, typically at the infeed tail.

18. If the belt is entering the drive pulley centered, but is tracking off at the takeup pulley, then adjust the drive snub roller.

CAUTION

Verify that the takeup is square with the drive frame before adjusting the drive snub roller. Using the snub roller to “fight” against an out-of-square takeup can result in unstable tracking and accelerated belt wear.

19. If the belt is tracking off where it exits the drive, then adjust the non-crowned (lower) routing roller. The crowned (upper) routing roller should be set square to the drive frame.

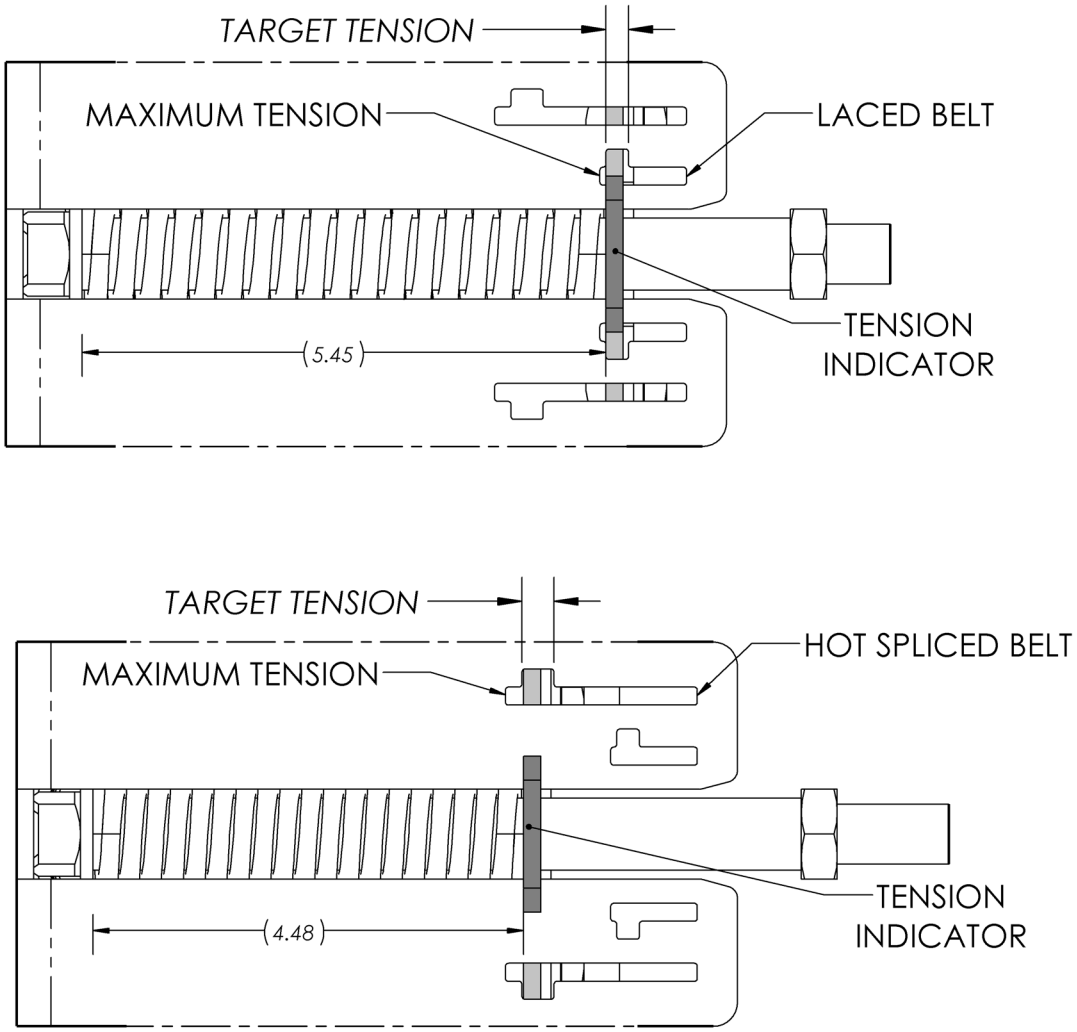

Figure 24: Tension Indicators

5.12.2 Pneumatic Takeup Drives

1. Once the belt is installed and joined, all return rollers and tracking rollers have been installed, and any guards have been reinstalled on the drive section, then the belt may be tensioned.
2. The pneumatic takeup has an air regulator installed. A new unit will be set to 0 PSI from the factory. With air supplied, set the takeup pressure according to the target pressure in Table 5: Pneumatic Takeup Pressure Settings.

WARNING

Ensure all personnel are clear of the belt and all guards are reinstalled before applying air pressure to the takeup cylinder. The belt and takeup mechanism may move rapidly as pressure is applied.

NOTE

Do not apply air to the takeup cylinder or attempt to set regulator pressure until the belt is installed and joined. The takeup will move to the end of its travel and will need to be manually reset before the belt can be installed.

3. Once pressure is applied, visually inspect the takeup chains for even loading. Both chains should be taut. If one chain span is taut and the other is loose, lock out the drive and adjust the chain tensioning screws on the cylinder yoke until both chain spans are evenly tensioned.

WARNING

Air pressure must be removed from the takeup cylinder before adjusting. The lockable disconnect valve provided with the takeup regulator will release all stored pressure when it is locked out. If another means of lockout is used, verify that all stored pressure is released and there is no residual belt tension before disconnecting the takeup chains.

4. The pneumatic takeup is self-adjusting for belt stretch and varying load conditions. Once the pressure is set and the chains are tensioned evenly, no further adjustment is necessary.

Table 5: Pneumatic Takeup Pressure Settings

PRESSURE	LACED BELT	HOT SPLICED BELT
Minimum Pressure (psi)	18.5	52
Target Pressure (psi)	20	54
Maximum Pressure (psi)	20.5	57

5. Once the conveyor is running, check belt tracking through the drive. If adjustments are necessary, it is recommended to adjust the tracking bracket on the non-motor side only for easier access.

CAUTION

Do not run the drive motor without the correct pressure applied to the takeup cylinder. Loss of pressure will cause a loss of belt tension, and the resulting slippage can damage the belt facing if not immediately corrected. It is recommended to have a pressure sensor monitoring the air system so the PLC can automatically shut down the drive motor if air pressure is lost.

6. If the belt is not centered when it enters at the drive pulley, it will be necessary to fix the belt tracking upstream, typically at the infeed tail.
7. If the belt is entering the drive pulley centered, but is tracking off at the takeup pulley, then adjust the drive snub roller.
8. If the belt is tracking off where it exits the drive, then adjust the non-crowned (lower) routing roller. The crowned (upper) routing roller should be set square to the drive frame.

5.12.3 Belt Tracking Principles

WARNING

Only qualified and experienced individuals should perform belt tracking procedures, which must be performed while the conveyor is running. Verify E-stop functionality before beginning a belt tracking procedure.

Monitor the belt during its initial startup and tracking, to ensure it does not track completely off a pulley or rub on internal conveyor components. Damage to the belt edge or other components can result. If possible, run the conveyor slowly at first until initial belt stability is verified.

Along the length of the conveyor, there are several points where adjustable rollers are installed for belt tracking. All of these adjustable rollers should be set square with the conveyor frame to start the tracking procedure. If multiple rollers with opposing tracking tendencies are left unchecked, unstable tracking and accelerated belt wear can result.

1. Begin the tracking procedure with all modules adjusted to their normal driving position as detailed in section 5.8.
2. When correcting a belt that is running to one side, follow the belt upstream (against the belt's running direction) to find the adjustable roller nearest to where it begins to track off.
    a. In a group of rollers, all other things being equal, the first roller the belt contacts will have the greatest tracking influence.
    b. Pivotable snub rollers in the drive, tails, and tracking modules, with approximately 30° of belt wrap, have a much greater tracking influence than the pivotable return rollers that have minimal wrap. The pivotable routing and return rollers in skew beds also have a large tracking influence.
    c. The crowned tail pulleys should be set square so that the restoring force created by the crown remains in the center of the conveyor. Use the tail snub roller for tracking instead.
    d. To fix tracking problems at the infeed tail, track the belt before it enters the infeed tail (at the next tracking module or at the discharge tail if the conveyor is short). The snub roller at the infeed tail is best used to direct the belt after it exits the infeed tail on the return span.
    e. Do not use the adjustable center module rollers except for those in the tracking modules. Keep them set square until the belt is fully tracked. Live roller conveyor should generally not require any adjustments to the adjustable center module rollers except for those in tracking zones. (If an adjustment is required, it is a sign that something is installed out of square.)
3. Adjust the roller to steer the belt back towards center. Start by making approximately 1/16" adjustments (1 full turn on a 3/8"-16 jack bolt). When the belt is nearly tracked, 1/32" (half turn) or even smaller increments may be needed.
4. The roller will "aim" the belt perpendicular to the axis of rotation, in the direction of belt travel. Or, the belt will track towards the side of the roller it touches first. See .
5. Make only small adjustments to a single roller at a time, and wait for the adjustments to take effect before adjusting other rollers.
    a. It will generally take 3 full revolutions of a belt for the effects of a tracking adjustment to fully stabilize.
    b. The most significant tracking effects are seen downstream of the roller that has been adjusted, but there will be some effect on upstream tracking as well.
    c. If larger adjustments are needed to prevent the belt tracking all the way off a pulley, monitor that area once the belt is under control. It may be necessary to adjust the pulley back in the other direction (reduce the magnitude of the initial adjustment) once the belt is running stably.
    d. Tracking adjustments can potentially affect the entire belt path. Particularly after a large adjustment is made, allow the belt to stabilize and check for newly developed tracking issues in other areas of the conveyor before proceeding.

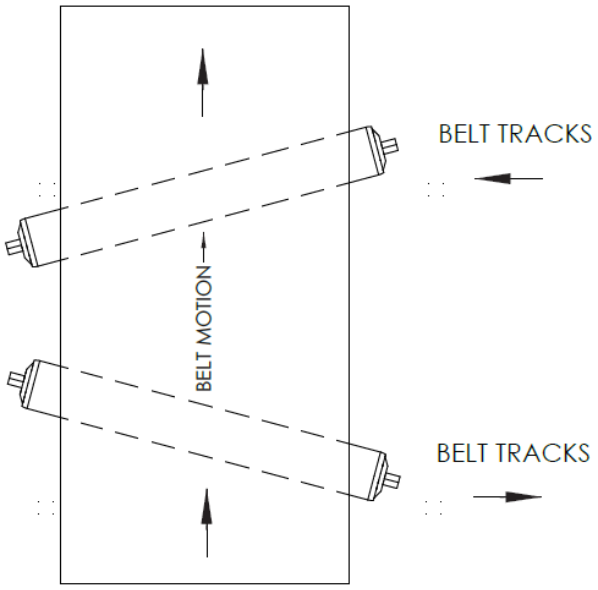

Figure 25: Belt Tracking by Adjusting Snub Rollers

6. To verify the belt is tracking stably, record its position by e.g. marking a line on the roller. Wait for 3 full revolutions of the belt and see if the average position has changed. It is normal for the belt to move back and forth slightly as it goes around, but if it doesn't return to the same position once per revolution, it is not yet stable.
7. Monitor the belt for tracking deviations. If needed, adjust one or more of the center tracking rollers in the modules to correct any local influences.
    a. The center tracking rollers should be used sparingly, only as necessary. If it becomes necessary to adjust a large number of module tracking rollers, or to adjust nearby module rollers in opposite directions so that they "fight" each other's influence, that would indicate a problem with section squareness or bed alignment that should be fixed first.
8. Verify that the belt is tracking centered along the entire length of the conveyor. For 3" RC conveyor, the finger guards have a set of holes in each zone for belt inspection. The belt edge should be visible through the center hole on each side.
9. For a new belt, thoroughly re-check the tracking after the first tension adjustment at 4 hours of runtime. Some tracking adjustments at this time should be expected.

NOTE

For further reference on belt tracking, refer to Habasit Fabric Conveyor Belts Installation and Maintenance Guide (6040).

6 Maintenance and Operation

The longevity and proper functionality of Bastian Solutions Conveyor is based upon standard operating practices and general maintenance of equipment. Setting up a regular maintenance schedule will help to ensure that products comply with the equipment's warranty. **Lockout/Tagout** procedures should be implemented before performing any maintenance.

6.1 Safety During Operation

The list below explains a series of recommended precautions that should be taken when personnel are near the equipment. This list is not intended to be the only precautions taken, but it serves as a guide of important steps to follow.

- Only fully trained employees should operate or perform maintenance on the conveyors. Proper training should include the detailed description of fail-safes, stopping devices, or other emergency regulations put in place.
- WARNING stickers should be replaced if worn or damaged.
- All personnel in the area should be alerted prior to starting any conveyor at all times. This process may vary depending on the conditions and layout of the site, but it should use audible and visual cues and all personnel should be made aware of the protocol.
- Operators should inspect the conveyor for damage, foreign objects, and verify all personnel is clear of the equipment prior to engaging drive.
- Ensure that all areas are clear of objects prior to loading and unloading.
- No personnel should ever ride, climb, step, sit on, or otherwise put body weight on the conveyor. Doing so puts both personnel and equipment at risk.
- Maintenance should be performed at regular intervals to assure the safety of operators and the longest life of components. Should a component break during operation or prior to operation, then lockout/tagout instructions should be performed immediately to prevent exposure to hazards.

6.2 Maintenance Schedule

To prolong the life of the material handling equipment and reduce the risk of potential safety hazards, it is vital that a preventative maintenance program be set in place and followed. The following instructions will help identify key areas requiring mechanical maintenance.

- An auditory inspection of the equipment should be performed to identify any unusual noise that may indicate that there is a problem with the equipment.
- Check for the presence of belt dust around the conveyor line. This is a good indicator on whether a belt is tracked properly. Presence of belt dust is due to a belt tracking issue.
- Properly lubricate all bearings. Refer to ABB Motors MN3016 for bearing specific information.
- For Dodge gearmotor electrical maintenance and installation instructions, refer to document Dodge Quantis RHB Installation and Maintenance Instructions (499322).

Table 6: Recommended Preventative Maintenance Schedule

✓	INTERVAL	DESCRIPTION OF CHECK
	Before each startup	Make sure the conveyor is clear of foreign objects and all personnel are safely away from moving parts.
	Once per shift	Visual and auditory inspection to check for oil or air leakages, hardware security, or any unusual noise that may indicate there is a problem with the equipment.
	Once per shift (or more frequently as needed)	Drain water from all pneumatic filter bowls (if pneumatic takeup is used).
	Daily	Inspect photoeyes, reflectors, and proximity switches, if present, to make sure they are secure and properly aligned.
	Weekly	Check for debris build-up on belt or conveying rollers. Clean if necessary.
	Weekly	Check for accumulations of belt dust which may indicate a tracking problem. Adjust tracking if needed.
	Weekly	Visually inspect O-ring bands. Replace any that are damaged or slipping.
	After first 4 hours following each new belt install, and monthly or 300 hours thereafter	Check proper belt tension and tracking. Re-tension or adjust as needed.
	Monthly or 300 hours	Check for loose bolts, nuts, and fittings. Tighten if necessary.
	Monthly or 300 hours	Remove any accumulated debris on the gearbox or motor housing.
	Monthly or 300 hours	Check the proper functioning of all proximity switches and photoeyes, if present. Secure all mounting brackets, clean the lenses and reflectors, and replace any that are defective or damaged.
	After first 24 hours, and every 2 months or 500 hours thereafter	Check torque of all set screws (see ABB Instruction Manual for DODGE® Bearings for appropriate torque values).
	3 months or 1,000 hours	Regrease all bearings with No. 2 lithium complex base grease (see ABB Instruction Manual for DODGE® Bearings for detailed lubrication instructions).
	3 months or 1,000 hours	Verify correct pressure setpoint of air regulators (if pneumatic takeup is used).
	3 months or 1,000 hours	Inspect the drive belt and splices or lacing for wear or damage. Schedule a belt replacement if severely worn (fabric layer beginning to show through the facing). Schedule a belt repair if any damaged areas are found.
	3 months or 1,000 hours	Walk the conveyor during operation and verify rotation of all conveying rollers. Replace any damaged rollers or rollers that do not rotate smoothly. Listen for unusual noises that may indicate a failing bearing.
	3 months or 1,000 hours	For conveyors with PTO: Remove the PTO cover and inspect the PTO belt. Check belt tension and adjust if necessary. Adjust timing pulley alignment if the belt has signs of tracking problems. Replace the belt if damaged.
	6 months or 2,000 hours	For conveyors with pneumatic drives: Clean and lubricate the takeup chains with SAE 30/ISO 100 gear or chain oil. Inspect the condition of the chain sprockets. Replace or swap the sprockets if the teeth are severely worn into a

		"hook" shape. (Left and right sprockets may be swapped in order to use the other side of the teeth and thereby double their wear life.)
	6 months or 2,000 hours	Check the oil level and oil condition in the drive motor gearbox. Top off or change the oil if needed. See the Dodge Quantis RHB Installation and Maintenance Instructions for detailed instructions on oil replacement and service intervals.

6.3 Fastener Torque

Unless otherwise specified, torque all fasteners to the values listed in Table 7: Fastener Standard Torque Values. Setscrews, bearing mounting bolts, and taper bushing fasteners should be torqued with a calibrated torque wrench and paint marked.

Table 7: Fastener Standard Torque Values

FASTENER TYPE	FASTENER SIZE	TORQUE	
Setscrew	#10-32	30 in-lbs	
	1/4"-28	72 in-lbs	
	5/16"-24	140 in-lbs	
	3/8"-24	250 in-lbs	
Socket head cap screw	#4-40	14 in-lbs	
	#8-32	48 in-lbs	
	#10-32	80 in-lbs	
	1/4"-20	167 in-lbs	
Button head cap screw	#10-32	55 in-lbs	
	1/4"-28	105 in-lbs	
Grade 5 carriage bolt or hex head cap screw	1/4"-20	101 in-lbs	
	5/16"-18	209 in-lbs	
	3/8"-16		31 ft-lbs
	1/2"-13		75 ft-lbs
	5/8"-11		150 ft-lbs
Grade 8 carriage bolt or hex head cap screw	5/16"-18		24 ft-lbs
	3/8"-16		44 ft-lbs
	1/2"-13		106 ft-lbs
Shoulder bolt	M8-1.25		20 ft-lbs

6.4 Belt Replacement

1. Locate the belt lacing for a laced conveyor. Stop the conveyor with the lacing on top and at a convenient place for connecting the new belt (generally next to the infeed tail). For a hot-spliced belt, it is not necessary to locate the old splice unless the old belt is planned to be reused.

WARNING Turn off and lock out the drive before removing guards or changing belt tension.

2. With the conveyor locked out, remove all belt tension. Pneumatic takeups will lose tension when the air supply is locked out.
3. For conveyors with PTO, disconnect the driven conveyors by removing the PTO belt(s).
4. Remove conveying rollers and finger guards as needed to access a section of the old belt.
5. Remove the lacing pin for a laced belt, or cut the old belt if it is hot spliced.
6. Connect the end of the new belt to the end of the old belt. Make sure the final thickness is less than 1/4". Laced belts may be connected together using the lacing and pin. Hot spliced belts will need to be taped together.
7. Using the old belt, pull the new belt through the conveyor. Generally, the drive pulley will not turn freely, so this process may need to be done in stages to get the belt past the drive.
8. See section 5.5 for instructions on joining the new belt, and belt routing information if needed.
9. Reinstall any PTO belt(s), conveying rollers, and guards that were removed.

6.5 Screw Takeup Drive

See Figure 31: General Arrangement, Belt Under Roller AC, Screw Takeup Drive, Sheet 1 of 1 in Appendix 2: General Arrangement Drawings for exploded views and part numbers.

WARNING Turn off and lock out the drive before removing guards or replacing any parts on the drive module.

6.5.1 Drive Motor Replacement

1. Before removing the existing motor, check motor and gearbox nameplates to verify that the replacement motor is the correct shaft size, gear ratio, and voltage.
2. Verify that electrical power is not present and is properly locked out, then disconnect the electrical connections in the motor conduit box. Note the phase rotation for later so the replacement motor will spin the same direction.

WARNING Only qualified electricians should connect or disconnect motor terminals. Incorrect connection can cause hazardous voltages to be present on the outer case of the motor or connected equipment, and can damage the motor or VFD.

WARNING For motors with VFDs, hazardous electrical power may be present for several minutes after the supply is turned off and locked out, due to the VFD's internal capacitors.

3. Remove the plastic dust cover, shaft fixing bolt, and shaft retaining washer in the end of the motor's hollow bore.
4. Support the motor from underneath.

WARNING Larger gearmotors are very heavy and will require mechanical assistance (e.g. a pump cart) to remove and replace safely. Always use safe lifting practices and be cautious of pinch points that can be created between the motor and its supports.

5. Loosen, but do not remove, the 1”-8 teardrop bolt. Conveying rollers may be removed to gain access to the nut inside the drive section. See Figure 31: General Arrangement, Belt Under Roller AC, Screw Takeup Drive, Sheet 1 of 1 in Appendix 2: General Arrangement Drawings for details.
6. Remove the shoulder bolt connecting the motor’s torque arm to the teardrop. The motor will have a tendency to rotate around the shaft once this bolt is removed. Lift the teardrop out of the way so it clears the motor’s torque arm.
7. Slide the motor off the drive shaft. If the motor does not slide freely, it may be binding because the motor’s weight is not evenly supported.

Never hammer on the motor, gearbox, or shaft. Damage to the drive pulley bearings or gearbox bearings can result.

8. Inspect the shaft and shaft key. File off any burrs, clean the shaft of any debris or corrosion, and apply a good quality anti-seize compound to all exposed steel surfaces.
9. Orient the new motor’s key slot to match the key location in the shaft. For higher gear reductions, this may require temporarily removing the rear cover to spin the motor fan by hand.
10. Slide the new motor onto the drive shaft. The new motor should slide freely; if it does not, find the area that is binding and correct it. Forcing the motor in place will make it extremely difficult to remove, and may cause damage to the drive shaft or gearbox bearings.
11. Reinstall the shoulder bolt in the new motor’s torque arm, and tighten the 1”-8 teardrop bolt to 200 ft-lbs. See Table 7: Fastener Standard Torque Values in section 6.3 for tightening torque of the shoulder bolt.
12. Reinstall the shaft fixing hardware, ensuring that the threads are coated with anti-seize.
13. Reconnect the electrical connections, maintaining the phase rotation that was noted when disconnecting the old motor. Review the winding diagram provided on the motor nameplate or inside the junction box, to ensure the motor windings are set up for the correct voltage.
14. Replace any conveying rollers and guards that were removed. Briefly start up the new motor to ensure it is running in the correct direction.

6.5.2 Drive Pulley Replacement

1. Follow steps 2 through 7 of section 6.5.1 to remove the drive motor (63).
2. Remove the side guards on both sides of the screw takeup. See Figure 31: General Arrangement, Belt Under Roller AC, Screw Takeup Drive, Sheet 1 of 1 for details.
3. Loosen the tensioner jam nuts, then turn both tensioner screws (70) counterclockwise until all belt tension is released. Ensure that both screws are adjusted evenly to prevent binding.
4. Remove the underside guard on the drive section. For conveyors where access from underneath is restricted, remove conveying rollers and one pressure module instead. See section 6.8 for details.
5. Remove the bearings (49) on both sides of the drive pulley (44).

Do not hammer or pry on the outer races of the bearings. Damage to the bearings may result.

6. Remove the XT25 bushings on either side of the pulley shaft. Access to the bushing bolts is provided once the bearings are removed. Reference the PCI XT bushing installation instruction sheet for detailed instructions.
7. Repeat step 6 for the replacement pulley, making sure to keep the replacement parts separate from the parts which are removed from the conveyor.
8. Slide the pulley shaft out from the conveyor, making sure to support the pulley drum.

9. Push the loosened belt to one side and slide the pulley drum out of the drive module. Slide the replacement pulley drum into the same location, without losing the loop of belting.
10. Slide the replacement pulley shaft into the conveyor to hold the drive pulley drum loosely in place.
11. Verify correct belt routing using the arrows on the side of the drive section. See Figure 24: Screw Takeup Drive Belt Routing in section 5.5.1 for confirmation.
12. Reassemble and torque the XT bushings on the replacement pulley following the PCI XT bushing installation instruction sheet, taking care that the pulley drum is centered between the two sideframes.
13. Reinstall both drive pulley bearings (49). Torque the set screws per ABB Motors MN3016, only after both bearings are fully installed and their mounting bolts are torqued.
14. Follow steps 8 through 14 of section 6.5.1 to replace the drive motor.
15. See section 5.12.1 for belt tensioning and tracking instructions.
16. Replace any guards or conveying rollers that were removed.

6.5.3 Takeup Pulley Replacement

1. Remove the side guards on both sides of the screw takeup. See Figure 31: General Arrangement, Belt Under Roller AC, Screw Takeup Drive, Sheet 1 of 1 for details.
2. Loosen the tensioner jam nuts, then turn both tensioner screws (70) counterclockwise until all belt tension is released. Ensure that both screws are adjusted evenly to prevent binding.
3. Continue turning both tensioner screws (70) until the tension indicator weldments (71) are completely unthreaded on both sides.
4. Remove the tension indicator weldments (71). Leave the takeup springs (68) and guide tubes (69) on the end of the tensioner screws. Slide the tensioner screws out of the way.
5. Remove the bearings (66) and shaft fixing hardware on both sides of the takeup pulley (67).

Do not hammer or pry on the outer races of the bearings. Damage to the bearings may result.

6. Slide the takeup pulley towards the drive motor until it can fit through the circular cutout in the drive frame, then remove the pulley from the drive.
7. Insert the new takeup pulley in the loop of belt that is left open from the removal of the old takeup pulley.
8. Verify correct belt routing using the arrows on the side of the drive section. See Figure 24: Screw Takeup Drive Belt Routing in section 5.12.1 for confirmation.
9. Install the bearings (66) and shaft fixing hardware on the new takeup pulley shaft, making sure the pulley drum is centered between the bearings. Torque the set screws per ABB Motors MN3016 only after both bearings are fully installed and their mounting bolts are torqued.
10. Reassemble the tensioner screws (70), takeup springs (68), guide tubes (69), and tension indicator weldments (71).
11. See section 5.12.1 for belt tensioning and tracking instructions.
12. Replace any guards that were removed.

6.5.4 Takeup Spring or Guide Tube Replacement

1. Remove the side guards on both sides of the screw takeup. See Figure 31: General Arrangement, Belt Under Roller AC, Screw Takeup Drive, Sheet 1 of 1 for details.
2. Loosen the tensioner jam nuts, then turn both tensioner screws (70) counterclockwise until all belt tension is released. Ensure that both screws are adjusted evenly to prevent binding.
3. Continue turning the affected tensioner screw (70) until the tension indicator weldment (71) is completely unthreaded.
4. Remove the tension indicator weldment (71).

5. Remove the old takeup spring (68) and/or the old guide tube (69), and insert the replacement spring or guide tube.
6. Reassemble the tensioner screw (70), takeup spring (68), guide tube (69), and tension indicator weldment (71).
7. See section 5.12.1 for belt tensioning and tracking instructions.
8. Replace any guards that were removed.

6.5.5 Idler Roller Replacement

1. Remove the side guards on both sides of the screw takeup. See Figure 31: General Arrangement, Belt Under Roller AC, Screw Takeup Drive, Sheet 1 of 1 for details.
2. Loosen the tensioner jam nuts, then turn both tensioner screws (70) counterclockwise until all belt tension is released. Ensure that both screws are adjusted evenly to prevent binding.
3. Remove the underside guard on the drive section. For conveyors where access from underneath is restricted, remove conveying rollers and one pressure module instead. See section 6.8 for details.
4. Unbolt the affected roller (46) or (47) from both sides of the drive, and lower or raise it until it can be slid out from the belt.
5. Insert the replacement roller (46) or (47). Note that item (46) is a crowned roller, which can be identified by the shiny machined surface. The crown is very slight and will generally not be visible without a straightedge to compare against. Item (47) is a non-crowned roller with a mill finish tube.
6. Verify correct belt routing using the arrows on the side of the drive section. See Figure 24: Screw Takeup Drive Belt Routing in section 5.12.1 for confirmation.
7. Replace the bolt and lock washer on both sides of the roller. If the adjustment brackets were not moved during the procedure, the previous tracking setting may be maintained; otherwise, set the roller square to the conveyor frame.
8. See section 5.12.1 for belt tensioning and tracking instructions.
9. Replace any guards or conveying rollers that were removed.

6.5.6 Bearing Replacement and Maintenance

1. Periodically grease each bearing following the instructions in the ABB Motors MN3016 bearing manual. Do not over-lubricate. Too much grease can damage bearing seals or cause excessive heating.
2. If bearing replacement is necessary, follow the instructions in section 6.5.2 for the drive pulley bearings (49), or in section 6.5.3 for the takeup pulley bearings (66).

6.6 Pneumatic Takeup Drive

See Figure 30: General Arrangement, Belt Under Roller AC, Pneumatic Takeup Drive, Sheet 1 of 1 in Appendix 2: General Arrangement Drawings for exploded views and part numbers.

Turn off and lock out both the drive motor and the air supply to the takeup cylinder before removing guards or replacing any parts on the drive module.

6.6.1 Drive Motor Replacement

1. Before removing the existing motor, check motor and gearbox nameplates to verify that the replacement motor is the correct shaft size, gear ratio, and voltage.
2. Verify that electrical power is not present and is properly locked out, then disconnect the electrical connections in the motor conduit box. Note the phase rotation for later so the replacement motor will spin the same direction.

WARNING

Only qualified electricians should connect or disconnect motor terminals. Incorrect connection can cause hazardous voltages to be present on the outer case of the motor or connected equipment, and can damage the motor or VFD.

WARNING

For motors with VFDs, hazardous electrical power may be present for several minutes after the supply is turned off and locked out, due to the VFD's internal capacitors.

3. Remove the plastic dust cover, shaft fixing bolt, and shaft retaining washer in the end of the motor's hollow bore.
4. Support the motor from underneath.

WARNING

Larger gearmotors are very heavy and will require mechanical assistance (e.g. a pump cart) to remove and replace safely. Always use safe lifting practices and be cautious of pinch points that can be created between the motor and its supports.

5. Loosen, but do not remove, the 1"-8 teardrop bolt. The underside cover nearest the motor may be removed to gain access to the nut inside the drive section. See Figure 30: General Arrangement, Belt Under Roller AC, Pneumatic Takeup Drive, Sheet 1 of 1 in Appendix 2: General Arrangement Drawings for details.
6. Remove the shoulder bolt connecting the motor's torque arm to the teardrop. The motor will have a tendency to rotate around the shaft once this bolt is removed. Lift the teardrop out of the way so it clears the motor's torque arm.
7. Slide the motor off the drive shaft. If the motor does not slide freely, it may be binding because the motor's weight is not evenly supported.

CAUTION

Never hammer on the motor, gearbox, or shaft. Damage to the drive pulley bearings or gearbox bearings can result.

8. Inspect the shaft and shaft key. File off any burrs, clean the shaft of any debris or corrosion, and apply a good quality anti-seize compound to all exposed steel surfaces.
9. Orient the new motor's key slot to match the key location in the shaft. For higher gear reductions, this may require temporarily removing the rear cover to spin the motor fan by hand.
10. Slide the new motor onto the drive shaft. The new motor should slide freely; if it does not, find the area that is binding and correct it. Forcing the motor in place will make it extremely difficult to remove, and may cause damage to the drive shaft or gearbox bearings.
11. Reinstall the shoulder bolt in the new motor's torque arm, and tighten the 1"-8 teardrop bolt to 200 ft-lbs. See Table 7: Fastener Standard Torque Values in section 6.3 for tightening torque of the shoulder bolt.
12. Reinstall the shaft fixing hardware, ensuring that the threads are coated with anti-seize.
13. Reconnect the electrical connections, maintaining the phase rotation that was noted when disconnecting the old motor. Review the winding diagram provided on the motor nameplate or inside the junction box, to ensure the motor windings are set up for the correct voltage.
14. Replace any guards that were removed. Briefly start up the new motor to ensure it is running in the correct direction.

6.6.2 Drive Pulley Replacement

1. Follow steps 2 through 7 of section 6.6.1 to remove the drive motor (63).

2. Ensure air pressure is removed from the tensioning cylinder (55) and the belt is slack. It may be necessary to remove one of the takeup guards and manually extend the tensioning cylinder to provide extra belt slack. See Figure 30: General Arrangement, Belt Under Roller AC, Pneumatic Takeup Drive, Sheet 1 of 1 for details.
3. Remove conveying rollers and one pressure module to access the drive pulley from above. See section 6.8 for details.
4. Remove the bearings (49) on both sides of the drive pulley (44).

Do not hammer or pry on the outer races of the bearings. Damage to the bearings may result.

5. Remove the XT25 bushings on either side of the pulley shaft. Access to the bushing bolts is provided once the bearings are removed. Reference the PCI XT bushing installation instruction sheet for detailed instructions.
6. Repeat step 5 for the replacement pulley, making sure to keep the replacement parts separate from the parts which are removed from the conveyor.
7. Slide the pulley shaft out from the conveyor, making sure to support the pulley drum.
8. Push the loosened belt to one side and slide the pulley drum out of the drive module. Slide the replacement pulley drum into the same location, without losing the loop of belting.
9. Slide the replacement pulley shaft into the conveyor to hold the drive pulley drum loosely in place.
10. Verify correct belt routing using the arrows on the side of the drive section. See Figure 15: Pneumatic Takeup Drive Belt Routing in section 5.5.2 for confirmation.
11. Reassemble and torque the XT bushings on the replacement pulley following the PCI XT bushing installation instruction sheet, taking care that the pulley drum is centered between the two sideframes.
12. Reinstall both drive pulley bearings (49). Torque the set screws per ABB Motors MN3016 only after both bearings are fully installed and their mounting bolts are torqued.
13. Follow steps 8 through 14 of section 6.6.1 to replace the drive motor.
14. See section 5.12.2 for belt tensioning and tracking instructions.
15. Replace any guards or conveying rollers that were removed.

6.6.3 Takeup Pulley Replacement

1. Remove the side guards on both sides of the takeup. See Figure 30: General Arrangement, Belt Under Roller AC, Pneumatic Takeup Drive, Sheet 1 of 1 for details.
2. Ensure air pressure is removed from the tensioning cylinder (55) and the belt is slack. It may be necessary to manually extend the tensioning cylinder to provide extra belt slack.
3. Remove the bearings (48) and the shaft retaining hardware from both sides of the takeup pulley (45). The chain (52) may be left connected. Each side of the takeup carriage may be set aside once it is removed from the takeup pulley. Do not take the chains off the sprockets (51) or allow one chain to skip a tooth on the sprocket.

Do not hammer or pry on the outer races of the bearings. Damage to the bearings may result.

4. Slide the takeup pulley towards the drive motor until it can fit through the circular cutout in the drive frame, then remove the pulley from the drive.
5. Insert the new takeup pulley in the loop of belt that is left open from the removal of the old takeup pulley.
6. Verify correct belt routing using the arrows on the side of the drive section. See Figure 15: Pneumatic Takeup Drive Belt Routing in section 5.5.2 for confirmation.

7. Install the bearings (48) and shaft fixing hardware on the new takeup pulley shaft, making sure the pulley drum is centered between the bearings and that proper clearances of approximately 3/16” each side between the carriages and the takeup guides are observed. Torque the set screws per ABB Motors MN3016 only after both bearings are fully installed and their mounting bolts are torqued.
8. Check the chain (52) for proper tooth engagement on the sprockets (51).
9. Manually retract the tensioning cylinder until there is no slack left in the chain (52), to avoid shock loading the takeup mechanism on first startup. Verify that both sides are taking tension evenly.
10. Replace any guards that were removed.
11. See section 5.12.2 for belt tensioning and tracking instructions.

6.6.4 Takeup Chain and Sprocket Replacement and Maintenance

1. Periodically (every 6 months or 2,000 hours of operation) clean and lubricate the takeup chain (52) and connecting links (53) with an SAE 30 (ISO 100) gear and chain oil.
    a. Brush the oil over the chain until every surface is wet (not dripping) with oil.
    b. Soak up excess oil, as oil on the belt can cause it to slip.
2. The chain will need to be replaced if it has worn to a stretch of 1.5% or if the chain joints are “frozen” or do not articulate smoothly.
    a. Measure a distance of 20 chain pitches, center-to-center, with the chain under moderate tension, to determine chain wear. A new chain will measure 12 1/2”, and a fully worn chain will measure 12 11/16”. See Figure 26: Chain Pitch Measurement.
    b. Both chains should be replaced at the same time, and the sprockets should generally be replaced or rotated when the chains are replaced.

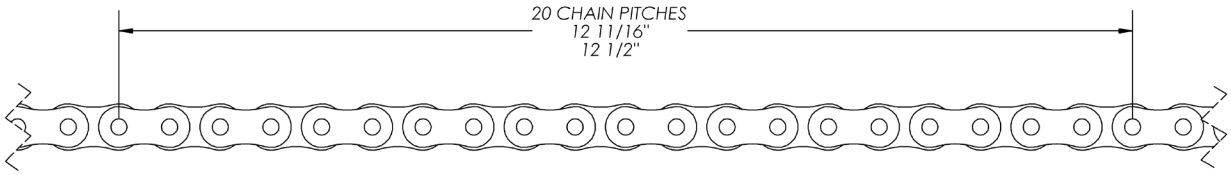

Figure 26: Chain Pitch Measurement

NOTE

Rapid chain wear is a sign of insufficient lubrication! In very dusty environments or areas with abrasive product contamination, the frequency of lubrication may need to be increased.

3. Sprockets will need to be replaced or rotated once the sprocket teeth start wearing into a “hook” profile with noticeable undercut. Both sprockets should be replaced or rotated at the same time, but the chains need not be replaced if they are still in good condition.
4. To replace the takeup chains, remove the side guards on both sides of the takeup. See Figure 30: General Arrangement, Belt Under Roller AC, Pneumatic Takeup Drive, Sheet 1 of 1 for details.
5. Ensure air pressure is removed from the tensioning cylinder (55) and the belt is slack. It may be necessary to manually extend the tensioning cylinder to provide extra belt slack.
6. Remove the connecting links (53) from the takeup carriage and from the tensioning cylinder yoke.
7. Inspect the hanger bolts (64) in the tensioning cylinder yoke. Replace if they are worn or damaged. Ensure both hanger bolts are adjusted to the same length away from the cylinder yoke.
8. Inspect the sprockets (51). If the sprocket teeth are worn, they should be replaced along with the chain. Running new chain on worn-out sprockets will cause the new chain to wear faster.

9. If the back side of the sprocket teeth are unworn, the sprockets may be rotated (swapped left-for-right so the chain engages with the unworn “back” side of each tooth). If both sides of the teeth are worn, the sprockets should be replaced.
10. When rotating or replacing sprockets, ensure that the distance of 8 1/2” between the inner faces of each sprocket is maintained, and that the sprockets are centered with respect to the two drive frames. It is not necessary to remove the sprocket shaft or bearings.
11. Compare the new chain with the removed chain to make sure the new chains have the same number of links.
12. Install the new chains. Make sure that the number of links between the sprocket engagement and the takeup carriage is the same on both sides.
13. Manually retract the tensioning cylinder until there is no slack left in the chain (52), to avoid shock loading the takeup mechanism on first startup. Verify that both sides are taking tension evenly.
14. Replace any guards that were removed.
15. See section 5.12.2 for belt tensioning and tracking instructions.

6.6.5 Idler Roller Replacement

1. Ensure air pressure is removed from the tensioning cylinder (55) and the belt is slack. It may be necessary to remove one of the takeup guards and manually extend the tensioning cylinder to provide extra belt slack. See Figure 30: General Arrangement, Belt Under Roller AC, Pneumatic Takeup Drive, Sheet 1 of 1 for details.
2. Remove conveying rollers and one pressure module to access the idler roller from above. See section 6.8 for details.
3. Unbolt the affected roller (46) or (47) from both sides of the drive, and raise it until it can be slid out from the belt.
4. Insert the replacement roller (46) or (47). Note that the roller (46) is a crowned roller, which can be identified by the shiny machined surface. The crown is very slight and will generally not be visible without a straightedge to compare against. Item (47) is a non-crowned roller with a mill finish tube.
5. Verify correct belt routing using the arrows on the side of the drive section. See Figure 15: Pneumatic Takeup Drive Belt Routing in section 5.5.2 for confirmation.
6. Replace the bolt and lock washer on both sides of the roller. If the adjustment brackets were not moved during the procedure, the previous tracking setting may be maintained; otherwise, set the roller square to the conveyor frame.
7. Replace any guards or conveying rollers that were removed.
8. See section 5.12.2 for belt tensioning and tracking instructions.

6.6.6 Bearing Replacement and Maintenance

1. Periodically grease each bearing following the instructions in the ABB Motors MN3016 bearing manual. Do not over-lubricate. Too much grease can damage bearing seals or cause excessive heating.
2. If bearing replacement is necessary, follow the instructions in section 6.6.2 for the drive pulley bearings (49), or in section 6.6.3 for the takeup pulley bearings (48).
3. If the takeup sprocket bearings (49) need to be replaced, follow the instructions for replacing sprockets in section 6.6.4 until both sprockets are removed, then continue by removing the shaft and bearings.
4. Ensure the shaft is centered when replacement bearings are installed.
5. Slide the shaft through both bearings before tightening down the bearing fasteners, to ensure alignment. Torque the set screws per ABB Motors MN3016 only after both bearings are fully installed and their mounting bolts are torqued.

6.6.7 Air Cylinder Replacement

1. Remove takeup guards on both sides, and both underside guards from the drive module. See Figure 30: General Arrangement, Belt Under Roller AC, Pneumatic Takeup Drive, Sheet 1 of 1 for details.
2. Ensure air pressure is removed from the tensioning cylinder (55) and the belt is slack. It may be necessary to manually extend the tensioning cylinder to provide extra belt slack.
3. Unbolt the tensioning yoke from the rod end of the tensioning cylinder.
4. Unhook the air line (19) from the elbow fitting (57) where it enters the cylinder.
5. Push the cylinder rod into the tensioning cylinder until it bottoms out.
6. Unbolt the four bolts holding the cylinder faceplate to the drive frame.
7. The tail end of the cylinder (opposite the rod) will be resting on a protective angle brace. Remove the angle brace to slide the cylinder out.
8. Install the elbow air fitting (57) and the breather vent (56) on the new cylinder.
9. Insert the new cylinder rod into its mount and reinstall the angle brace to hold the cylinder in place.
10. Tighten the four bolts to secure the cylinder faceplate to the drive frame.
11. Reinstall the tensioning yoke on the rod end of the new cylinder. Inspect the chains to make sure both chains are still evenly tensioned and sitting correctly on the sprockets.
12. Hook the air line (19) to the elbow fitting (57). If the end of the tube is damaged, make a clean square cut to remove the damaged section. Ensure the air line bottoms out in the fitting.
13. Manually retract the tensioning cylinder until there is no slack left in the chain (52), to avoid shock loading the takeup mechanism on first startup. Verify that both sides are taking tension evenly.
14. Replace any guards that were removed.
15. See section 5.12.2 for belt tensioning and tracking instructions.
16. Once air pressure is applied, do an auditory check for any air leakage. Correct any leaks that are found.

6.6.8 Air Regulator Replacement and Maintenance

1. The water bowl at the bottom of the air regulator (58) should be emptied regularly per Table 6: Recommended Preventative Maintenance Schedule.
2. To replace the air regulator (58) or dump valve (59), first lock out and disconnect the input air supply.

The air supply must be locked out upstream of the integrated dump valve before replacing or disassembling any part of the regulator or dump valve assembly. Ensure that all residual pressure is removed when the air supply is locked out.

3. Remove the two socket head cap screws on the front face of the flow-through bracket (60) which connects the regulator and dump valve together. Both the regulator and dump valve will detach from the conveyor. See Figure 30: General Arrangement, Belt Under Roller AC, Pneumatic Takeup Drive, Sheet 1 of 1 for details.
4. Transfer any fittings from the old part to the new part, ensuring that no debris gets into the air system. Use a thread tape or thread sealant to prevent leaks.
5. Slide the regulator and dump valve back onto the flow-through bracket and replace the front clamping bar. Tighten the two socket head cap screws.
6. If the regulator has been replaced, set the new regulator pressure per Table 5: Pneumatic Takeup Pressure Settings in section 5.12.2.
7. Once air pressure is applied, do an auditory check for any air leakage. Correct any leaks that are found.

6.7 Tail

See Figure 29: General Arrangement, RLVAC Tail, Sheet 1 of 1 in Appendix 2: General Arrangement Drawings for exploded views and part numbers.

Turn off and lock out the drive motor and the conveyor air supply (for pneumatic takeup models) before removing guards or replacing any parts on the tail.

6.7.1 Tail Pulley Replacement

1. Relax belt tension on the conveying belt by loosening the takeup. See section 5.12.1 for screw takeup drives or section 5.12.2 for pneumatic takeup drives.
2. If the tail pulley has an extended shaft and a PTO drive, remove the PTO drive guard and relax belt tension on the PTO drive belt. See Figure 29: General Arrangement, RLVAC Tail, Sheet 1 of 1 for details.
3. If the tail pulley has an extended shaft and a PTO drive, remove the PTO timing pulley (38) and taperlock bushing (39) following the removal procedure in the PCI bushing installation instruction sheet.
4. Remove banded tail rollers (22) and the tail guard (34).
5. Unbolt the tail bearings (36) and lift the entire tail pulley assembly out of the conveyor.
6. Remove the tail bearings from the pulley.

Do not hammer or pry on the outer races of the bearings. Damage to the bearings may result.

7. Install the tail bearings onto the new pulley. Do not tighten the set screws yet.
8. Verify the tail weldment is square to the frame by referencing the tail alignment guide seen in Detail A of Figure 29: General Arrangement, RLVAC Tail, Sheet 1 of 1 in Appendix 2: General Arrangement Drawings. The center square hole should align between the tail weldment and the sideframe on both sides.
9. Slide the new pulley into place inside the loop of belt. Verify belt routing with Figure 10: Tail Belt Routing in section 5.5.
10. Slide both bearings against their jack screws and snug the bearing bolts only until the bearings can move with slight resistance.
11. Adjust the jack screws to set the tail pulley square to the frame. If a square is placed on the sideframe, the leg of the square should touch the tail pulley in the exact center due to the pulley's crown.
12. Torque the bearing bolts. See Table 7: Fastener Standard Torque Values in section 6.3 for torque values.
13. Ensure the pulley drum is centered between the bearings, then torque the bearing setscrews.
14. If the tail pulley has an extended shaft and a PTO drive, follow the reassembly procedure in section 5.9 to reinstall the timing pulley.
15. Reinstall the guards and conveyor rollers that were removed.
16. Follow the belt tensioning and tracking procedures in section 5.12.1 for screw takeup drives, or section 5.12.2 for pneumatic takeup drives.

6.7.2 Tail Snub Replacement

1. Relax belt tension on the conveying belt by loosening the takeup. See section 5.12.1 for screw takeup drives or section 5.12.2 for pneumatic takeup drives.

2. Push on the hex shaft of the tail snub roller (37). The hex shaft is spring-loaded in one direction only. See Figure 29: General Arrangement, RLVAC Tail, Sheet 1 of 1 for details.
3. Remove the tail snub bracket on the side where the hex shaft cannot be pushed in towards the center of the conveyor. Do not disturb the tail snub jack screw.
4. Push the spring-loaded hex shaft out of the other tail snub bracket and lift the snub roller up, then slide it sideways to remove it from the conveyor. On smaller overall widths, it may be helpful to remove several conveying rollers and gain access from the top.
5. Slide in the replacement snub roller, orienting the spring-loaded hex shaft in the same direction.
6. Push the hex shaft in, slide the snub roller into position, then reinstall the tail snub bracket. Ensure it is positioned firmly against the tail snub jack screw. If the tail snub jack screw has been disturbed, set the snub roller square to the frame instead.
7. Reinstall any conveyor rollers that were removed.
8. Follow the belt tensioning and tracking procedures in section 5.12.1 for screw takeup drives, or section 5.12.2 for pneumatic takeup drives.

6.7.3 Bearing Replacement and Maintenance

1. Periodically grease each bearing following the instructions in the ABB Motors MN3016 bearing manual. Do not over-lubricate. Too much grease can damage bearing seals or cause excessive heating.
2. If bearing replacement is necessary, follow the instructions in section 6.7.1.

6.7.4 Roller Replacement

1. Apply pressure on the end of the hex shaft opposite the bands using a small diameter punch or similar tool until the shaft clears the frame. Be careful NOT to apply a side load to the hex shaft.
2. Provide upward force on the roller body until the hex is sitting above the sideframe. (A putty knife or other flat surface tool is recommended to be placed between the hex shaft and the inside of the frame. This will help protect the paint on the sideframe.)
3. Remove the hex shaft from the opposite hex hole.
4. Pull the roller away from the bands until the roller is completely free of the sideframes and bands.
5. Slide the new roller through the bands. Do not use a sharp or small diameter object to stretch the bands, and do not overstretch the bands (maximum stretch is 30% of the free length).
6. Once the new roller is through both bands, guide the hex shaft into the hex hole.
7. After the hex shaft is in the hex hole, the opposite side shaft can be inserted into the appropriate hex hole. Use the roller's length as leverage to aid in this step.
8. Use a putty knife or other flat surface tool to guide the hex shaft into the opposite hex hole.

NOTE

For banded rollers in the center of a zone, it is easiest to remove rollers one at a time, starting from one end, until the roller in question is reached.

6.7.5 Band Replacement

1. Follow the procedure in section 6.7.4 until the band is reached.
2. Remove the band and replace it with a new one. It is normal for new bands to be significantly tighter than used bands.
3. Reassemble the zone following the procedure in section 6.7.4.

6.8 Modules

See Figure 27: General Arrangement, RLVAC Bed Section, Sheet 1 of 2 and Figure 28: General Arrangement, RLVAC Bed Section, Sheet 2 of 2 in Appendix 2: General Arrangement Drawings for exploded views and part numbers.

WARNING

Turn off and lock out the drive motor and the conveyor air supply (for pneumatic takeup models) before removing guards or replacing any parts on the tail.

6.8.1 Bed Roller Replacement

1. For the banded rollers (22) that are used in belt tracking zones, follow the procedure in section 6.7.4.
2. For ungrooved conveying rollers (1), apply pressure on one end of the hex shaft using a small diameter punch or similar tool until the shaft clears the frame. Be careful NOT to apply a side load to the hex shaft.
3. Provide upward force on the roller body until the hex is sitting above the sideframe. (A putty knife or other flat surface tool is recommended to be placed between the hex shaft and the inside of the frame. This will help protect the paint on the sideframe.)
4. Remove the hex shaft from the opposite hex hole.
5. Insert the new roller into the opposite hex hole.
6. Use a putty knife or other flat surface tool to guide the hex shaft into the second hex hole.

6.8.2 Pressure Roller Replacement

1. Remove conveying rollers (1) until the pressure roller (2) is accessible. See Figure 27: General Arrangement, RLVAC Bed Section, Sheet 1 of 2 and Figure 28: General Arrangement, RLVAC Bed Section, Sheet 2 of 2 for details.
2. Follow the same procedure as in section 6.8.1 to remove and replace a pressure roller. It is not necessary to use a putty knife on the galvanized pressure pans.
3. Double check the correct positioning of the new pressure roller against Figure 20: Pressure Roller Locations for 2”RC Pressure Modules or Figure 21: Pressure Roller Locations for 3”RC Pressure Modules in section 5.7.
4. Reinstall any removed conveying rollers.

6.8.3 Pressure Spring Replacement

1. Remove the pressure spring assembly nut (79). See Detail A of Figure 28: General Arrangement, RLVAC Bed Section, Sheet 2 of 2 in Appendix 2: General Arrangement Drawings.
2. Pull the lower pressure spring assembly (80) out from the conveyor.
3. Pull the springs (74) off the studs of the lower pressure plate (75) and push new springs over the studs.
4. Re-insert the pressure assembly, lining up the holes in the springs with the studs on each module.
5. Re-install the washer (78) and nut (79).
6. Tighten the nut fully, until the lower pressure plate makes contact with the bed spacers on both sides.

6.8.4 Guide Bushing Replacement

1. Relax belt tension on the conveying belt by loosening the takeup. See section 5.12.1 for screw takeup drives or section 5.12.2 for pneumatic takeup drives.
2. Remove conveying rollers (1) until the entire pressure module is accessible. See Figure 27: General Arrangement, RLVAC Bed Section, Sheet 1 of 2 and Figure 28: General Arrangement, RLVAC Bed Section, Sheet 2 of 2 for details.
3. For 3” RC conveyor, remove the finger guard (20).

4. Evenly lift up the entire pressure module, including the module guide plates, until the guide pins clear the bushings and the module can be slid out from underneath the belt. Set the pressure module aside, noting its flow direction for later.
5. Pry off the retaining ring (7) holding the bushing (6) in place. Discard the old bushings and retaining rings. See Detail A of Figure 28: General Arrangement, RLVAC Bed Section, Sheet 2 of 2 in Appendix 2: General Arrangement Drawings.
6. Put a new bushing in place and press on a new retaining ring (7) until the bushing no longer moves vertically. The fingers of the retaining ring should face downward.
7. Reinstall the pressure module in the same orientation it was removed. It should not be necessary to loosen or reposition the module guide plates if the orientation is kept the same.
8. Ensure the module guide plates move freely in the guide bushings (6).
9. Reinstall any removed pressure module rollers, finger guards, and conveying rollers.
10. Follow the belt tensioning and tracking procedures in section 5.12.1 for screw takeup drives, or section 5.12.2 for pneumatic takeup drives. Check belt tracking in the area of the removed module. If the module was replaced in the same orientation, no adjustment should be necessary.

6.9 Skew Beds

6.9.1 Skew Roller and Band Replacement

Follow the same procedures as in section 6.7.4 and 6.7.5 for roller and band replacement.

6.9.2 Routing Roller Replacement

1. Relax belt tension on the conveying belt by loosening the takeup. See section 5.12.1 for screw takeup drives or section 5.12.2 for pneumatic takeup drives.
2. Remove the straight banded rollers (22) at the beginning or end of the skew section, until the routing roller (37) or (81) is accessible. See Figure 27: General Arrangement, RLVAC Bed Section, Sheet 1 of 2 and Figure 28: General Arrangement, RLVAC Bed Section, Sheet 2 of 2 for details.
3. One side of the roller hex will depress. Push the roller hex in until the roller can be tilted up and slid out of the conveyor.
4. It may be necessary to loosen (but do not remove) the bolts holding the routing roller frame to its bed spacers, to gain additional room to tilt the rollers.
5. Insert the replacement roller (37) or (81). Note that item (81) is a crowned roller, which can be identified by the shiny machined surface. The crown is very slight and will generally not be visible without a straightedge to compare against. Item (37) is a non-crowned roller with a mill finish tube.
6. Check belt routing against Figure 16: Skewed Bed Belt Routing in section 5.5.3.
7. Tighten any bolts that were loosened in step 4.
8. Reinstall any rollers, bands and guards that were removed.
9. Follow the belt tensioning and tracking procedures in section 5.12.1 for screw takeup drives, or section 5.12.2 for pneumatic takeup drives. Check belt tracking in the area of the replaced roller. If the roller was replaced without modifying the tracking adjustment on the crowned roller (81), minimal or no adjustment should be necessary.

6.10 Accessories

6.10.1 PTO

Reference the BSC manual for the driven conveyor (RLCAC or RLSAC) for details on PTO maintenance.

6.10.2 Tracking Zones

6.10.2.1 Tracking Roller Replacement

1. Relax belt tension on the conveying belt by loosening the takeup. See section 5.12.1 for screw takeup drives or section 5.12.2 for pneumatic takeup drives.

2. Remove conveying rollers to access the tracking roller. See Figure 27: General Arrangement, RLVAC Bed Section, Sheet 1 of 2 and Figure 28: General Arrangement, RLVAC Bed Section, Sheet 2 of 2 for details.
3. Unbolt and remove the tracking roller from the conveyor. Leave the tracking roller adjustment brackets in place so as not to disturb the existing tracking settings.
4. Follow the procedures in section 5.7 for installation of the new tracking roller.

6.10.2.2 Tracking Band Replacement

1. Relax belt tension on the conveying belt by loosening the takeup. See section 5.12.1 for screw takeup drives or section 5.12.2 for pneumatic takeup drives.
2. Remove conveying rollers to access the tracking roller. See Figure 27: General Arrangement, RLVAC Bed Section, Sheet 1 of 2 and Figure 28: General Arrangement, RLVAC Bed Section, Sheet 2 of 2 for details.
3. Unbolt and remove the tracking roller from the conveyor. Leave the tracking roller adjustment brackets in place so as not to disturb the existing tracking settings.
4. Push a flat head screwdriver or similar tool under one of the three tracking bands.
5. With the screwdriver angled slightly, turn the roller to “unscrew” the tracking band down the length of the roller and remove it.
6. Repeat for the other two bands.
7. Clean the roller surface to remove any oils that may make the bands slip. Ensure any solvent residue has evaporated before proceeding.
8. Stretch a new band over the roller, being careful not to overstretch or damage it.
9. Using the same screwdriver technique, place the new band in the center of the roller. Adjust its position until it is running true.
10. Repeat with the remaining two new bands. Adjust all three bands until they are touching without overlaps.
11. Follow the procedures in section 5.6 for installation of the tracking roller.

If tracking band installation is difficult, use a liquid hairspray to lubricate the roller surface. Once the hairspray “sets” it will help prevent the band from walking. Soapy water may also be used but it does not provide any additional gripping power. Do not use oils as lubricants, since these can keep the band from gripping the roller.

If tracking bands are found to walk over time, they can be fixed in place with a few small drops of cyanoacrylate superglue underneath the band every 90°. This can provide a quicker and easier solution than replacing the tracking band. Clean the roller before applying the superglue.

6.10.3 Return Roller Replacement

1. Push the roller hex in and tilt the roller up. With care, the roller can be extracted and replaced without removing belt tension or changing the roller’s tracking adjustment. See Figure 27: General Arrangement, RLVAC Bed Section, Sheet 1 of 2 and Figure 28: General Arrangement, RLVAC Bed Section, Sheet 2 of 2 for details.
2. If the belt is too tight to remove the return roller (e.g. if the return roller needing replacement is very near a drive or tail), then remove the 4 carriage bolts holding the yellow guard in place and drop the roller out through the bottom of the return roller module.
3. Slide the new roller into place.
4. Reinstall the guard if needed.
5. Check belt tracking once the new roller has been installed.

7 Troubleshooting and Repair

Bastian Solutions Conveyor encourages using the following troubleshooting techniques before contacting a Bastian Solutions Conveyor representative as these are the same techniques used by our field service engineers. To assist in data collection, Bastian Solutions Conveyor asks that any issues that arise be recorded in a log, with the mark number, a description of the issue, and the steps taken to resolve the issue. In case of a failure with unknown cause, do not discard broken or defective parts without checking with our field service team, since the parts may be needed for warranty claims information or in troubleshooting the root cause of the failure.

Table 8: Troubleshooting Guide

ERROR	CAUSE	ACTION
Unusual motor wobble	Wobble at the back of the motor is < 0.25”.	This movement in the motor is acceptable. There is no physical damage to the conveyor section.
	Wobble at the back of the motor is > 0.25”.	The drive pulley shaft is bent out of tolerance. Replace the drive pulley shaft.
Loud “hum” from the motor. Motor doesn’t run or runs slowly	Missing phase connection, incorrect winding configuration or other incorrect motor wiring	Verify motor wiring
	Motor is stalled	Check belt run for binding or severe overload
		Verify VFD current settings match motor nameplate FLA
		Verify motor winding configuration matches supply voltage
Scraping noises	The bearing shields have been displaced during installation/maintenance	Re-adjust bearing shield or order replacement bearing (based on severity of sound and product application).
	Physical interference between moving parts	Check for location of interference and adjust part accordingly.
Loud screech from tail	Tail guards rubbing on conveying rollers	Re-adjust tail guards for adequate clearance, until they no longer rub.
		Replace any conveying rollers that are out of round or wobbling by more than 1/8”

Belt dust generation	The belt is rubbing against a frame component.	Re-track and re-tension the belt.
	The belt is rubbing against a seized conveying roller or pressure roller	Replace damaged rollers.
	Excessive skew on tracking rollers	Re-square bed frame. Ensure tracking rollers are not “fighting” each other.
	The belt is slipping on the drive pulley	Re-tension the belt.
		Clean the belt and drive pulley if severe contamination is observed.
		Remove any overloads that may be present.
Belt edge wear	The belt is rubbing against a frame component.	Re-track and re-tension the belt. Remove any trailing fibers from the edge of the belt. Check and repair any damage to the belt splice.
		If the belt is less than 3” wide: Schedule belt replacement. Fix the tracking problems before belt replacement so as to avoid damage to the new belt.
Melted or severely worn spots on the belt facing	The belt is slipping on the drive pulley	Re-tension the belt. Replace if needed.
		Clean the belt and drive pulley if severe contamination is observed.
		For belts with traction layer on one side only, ensure the traction layer (shiny side) is facing the conveying rollers.
		Remove any overloads that may be present.
Belt tracks off	The bed sections are not square.	Adjust the bed sections for squareness and straightness.
	The tail pulleys are not square to the frame.	Adjust the tail pulleys.
	The take-up pulley is not square.	Adjust the take-up pulley. Ensure the belt tension is still appropriate for application.

Belt is difficult to track.	Check the orientation of the drive section. This is a common issue if the drive section is installed backwards and run in reverse.	Install the drive section in the correct orientation per the system layout drawings. The tight span of the belt (at the conveyor's infeed) should always touch the drive pulley first.
	Too many tracking elements fighting each other (usually the result of making too many changes at once)	Start over with belt tracking. Set everything square, recheck square/level/straightness of all sections, and begin again, making single adjustments in small increments and waiting for the changes to take effect before proceeding.
	Belt splice is not straight	Re-splice belt with a straightness of 1/4" per 10ft or better
	Belt is cut crooked (this is very rare)	Remove belt from the conveyor, spin it 180°, and re-install it without making any other changes. If the belt tracks off to the other direction, the belt is defective. Contact BSC for replacement information. If the belt tracks off to the same direction as before, the belt is not at fault.
Zone has poor drive or product hangs up	Insufficient module spring pressure	Fully tighten module spring bolts for live operation.
	Missing pressure rollers or missing bands	Verify all pressure rollers are present and turn freely
		For belt tracking zones, tail zones, and skew zones, verify the zone is banded together
Speed "surging" during startup	VFD controlled motor with a tuning problem	Re-tune the motor in a loaded configuration, or switch to open loop control if appropriate for your application. Consult your VFD manual for details.
	Acceleration too high for load and belt length	Use a soft start or VFD for across-the-line motors (recommended for 3HP or larger). Increase the acceleration time for VFD-controlled motors.

8 Appendix 1: Standard Gearmotor Options

- Standard gearmotors are 3 phase, 230V/460V, 4 pole motors. Listed conveyor speeds are for operation at 60Hz.
- Screw takeup drives may use either 1.250in or 1.500in shaft size. Pneumatic takeup drives use 1.500in shaft size only.
- Additional gear ratios and different motor voltage/frequency options are available. Contact BSC for details. When replacing an existing gearmotor, always refer to the motor nameplate.

Table 9: Standard Gearmotors with 1.250in Output

OUTPUT SHAFT SIZE (in)	MOTOR HP	SPEED (FPM)	GEAR RATIO	MOTOR SIDE	PART NUMBER
1.250 (BF38…)	1/4	68	67.18	Left	A013DM-10135
				Right	A013DM-10136
		93	49.38	Left	A013DM-10129
				Right	A013DM-10130
		125	36.69	Left	A013DM-10123
				Right	A013DM-10124
		170	26.90	Left	A013DM-10119
				Right	A013DM-10120
	1/2	68	67.18	Left	A013DM-10201
				Right	A013DM-10202
		93	49.38	Left	A013DM-10195
				Right	A013DM-10196
		125	36.69	Left	A013DM-10189
				Right	A013DM-10190
		160	28.72	Left	A013DM-10185
				Right	A013DM-10186
		210	21.81	Left	A013DM-10179
				Right	A013DM-10180
		288*	15.91	Left	A013DM-10173
				Right	A013DM-10174
		398*	11.50	Left	A013DM-10167
				Right	A013DM-10168
	1	210	21.81	Left	A013DM-10235
				Right	A013DM-10236
		288*	15.91	Left	A013DM-10229
				Right	A013DM-10230
		398*	11.50	Left	A013DM-10223
				Right	A013DM-10224
	2	398*	11.50	Left	A013DM-10267
				Right	A013DM-10268

*Speed is available for live operation only

Table 10: Standard Gearmotors with 1.500in Output

OUTPUT SHAFT SIZE (in)	MOTOR HP	SPEED (FPM)	GEAR RATIO	MOTOR SIDE	PART NUMBER
1.500 (BF68…)	1/2	66	69.78	Left	A013DM-10307
				Right	A013DM-10308
		88	51.96	Left	A013DM-10301
				Right	A013DM-10302
		151	30.38	Left	A013DM-10299
				Right	A013DM-10300
	1	66	69.78	Left	A013DM-10375
				Right	A013DM-10376
		88	51.96	Left	A013DM-10369
				Right	A013DM-10370
		116	39.39	Left	A013DM-10365
				Right	A013DM-10366
		151	30.38	Left	A013DM-10361
				Right	A013DM-10362
		216	21.22	Left	A013DM-10353
				Right	A013DM-10354
		271*	16.89	Left	A013DM-10349
				Right	A013DM-10350
		384*	11.94	Left	A013DM-10345
				Right	A013DM-10346
	2	151	30.38	Left	A013DM-10421
				Right	A013DM-10422
		216	21.22	Left	A013DM-10413
				Right	A013DM-10414
		271*	16.89	Left	A013DM-10409
				Right	A013DM-10410
		384*	11.94	Left	A013DM-10405
				Right	A013DM-10406
	3	216	21.22	Left	A013DM-10461
				Right	A013DM-10462
		271*	16.89	Left	A013DM-10457
				Right	A013DM-10458
		384*	11.94	Left	A013DM-10453
				Right	A013DM-10454
	5	271*	16.89	Left	A013DM-10495
				Right	A013DM-10496
		384*	11.94	Left	A013DM-10491
				Right	A013DM-10492

*Speed is available for live operation only

9 Appendix 2: General Arrangement Drawings

Table 11: RLVAC General Arrangement BOM

ITEM #	DESCRIPTION	PART NUMBER				
1	ROLLER, 1.9in OD, NO GRV, 7/16" HEX, XXin BF, ABEC-1	18” OAW	24” OAW	30” OAW	36” OAW	
		A001RL-10040	A001RL-10041	A001RL-10042	A001RL-10058	
2	ROLLER, 1.9in OD, NO GRV, 7/16" HEX, 7.00in BF, ABEC-1	A001RL-10237				
5	PIN, ROLLER AC, MODULE GUIDE	Z022RC-10095				
6	BEARING, ROLLER AC, MODULE GUIDE	Z022RC-10287				
7	RETAINING RING, 5/8" ID, EXTERNAL, PUSH-ON, BLACK PHOSPHATE	A003RR-10010				
19	TUBING, 3/8" OD, 1/4" ID, URETHANE, SHORE 95A, BLACK, 250ft L, FULL ROLL	A016TU-10029				
20	GUARD, ROLLER AC, MODULE, XXin ZONE LENGTH, 3in RS	18” ZONE LENGTH	24” ZONE LENGTH	30” ZONE LENGTH	36” ZONE LENGTH	60” ZONE LENGTH
		Z022RC-10057	Z022RC-10058	Z022RC-10059	Z022RC-10060	Z022RC-10062
21	HEHT ORING, 0.188in OD, XXin L, TRANSLUCENT GREEN, Xin RS	2” RS		3” RS		
		A001BA-10042		A001BA-10040		
22	ROLLER, 1.9in OD, 2 GRV, 7/16" HEX, XXin BF, ABEC-1	18” OAW	24” OAW	30” OAW	36” OAW	
		A001RL-10037	A001RL-10038	A001RL-10039	A001RL-10056	
23	ROLLER, 2.0in OD, NO GRV, 3/8"-16 FEMALE THREAD, 17mm SHAFT, 7.00in BF, ABEC-1, HEAVY DUTY	A001RL-10306				
24	TRACKING BAND, 0.5in W, 5.88in L, 0.03in THICK, 92A, BLACK	A001BA-10059				
25	BRACKET, ROLLER AC, MODULE TRACKING ADJUSTMENT, FEMALE THREAD	Z022RC-10292				
26	HHCS, 3/8"-16 UNC, GR5, ZINC PLATED, 5/8"L, FULL THD	A003HC-00086				
27	SERRATED BELLEVILLE LOCK WASHER, NARROW (FOR SHCS), 3/8" AND M10 SCREW SIZE	A003IW-00007				
28	CARRIAGE BOLT, 1/4"-20 UNC, GR5, ZINC PLATED, 1/2"L, FULL THD	A003CB-00014				
29	WIZ NUT, 1/4"-20 UNC, GR2, ZINC PLATED	A003WI-00006				
30	BRACKET, ROLLER AC, MODULE TRACKING ADJUSTMENT	Z022RC-10281				
31	ASM, ROLLER AC, BELT RETURN	Z020RA-10039				
32	SHCS, 1/4"-20 UNC X 1/2"L , NYLON PATCH, ASTM A574, BLACK OXIDE, FULL THD	A003SH-10014				
34	GUARD, ROLLER AC, TAIL, BED ROLLERS	Z022RC-10043				
35	PULLEY, 6in OD, 6in FW, 1.688in OD X XXin L THRU SHAFT, PTO FOR XXin OAW, RADIAL CROWNED, XT20 BUSHING	NO PTO (ANY OAW)	PTO (18” OAW)	PTO (24” OAW)	PTO (30” OAW)	PTO (36” OAW)
		A001CP-10127	x	x	x	A001CP-10117
36	BEARING, PILLOW BLOCK, 1.688in BORE	A003BR-10057				
37	ROLLER, 3.5in OD, NO GRV, 11/16" HEX, 7in BF, HEAVY DUTY	A001RL-10233				
38	SPROCKET, GT2, 5mm PITCH, XXX TOOTH, 25mm BELT WIDTH, 2012 TAPERLOCK BUSHING, NO FLANGE, CAST IRON, BLACK OXIDE	1:1 SPEED RATIO		OTHER SPEED RATIOS		
		A001CP-10139		CONTACT BSC		

39	BUSHING, TAPERLOCK 2012, 1.688in BORE	A003BU-10014	
40	MACHINE KEY, 3/8" X 3/8", 1.5in L, OVERSIZED, CARBON STEEL, ROUNDED ENDS	A003MK-10015	
41	BRACKET, PTO MOUNT, GUARD, TAIL, STYLE X	LEFT INFEED OR RIGHT DISCHARGE	RIGHT INFEED OR LEFT DISCHARGE
		Z022RC-10198	Z022RC-10199
42	GUARD, ROLLER AC, TAIL, PTO COVER	Z022RC-10041	
44	PULLEY, 10in OD, 6in FW, 2.000in X 19.75in KEYED AND END TAPPED THRU SHAFT, FOR Xin HOLLOW BORE, RADIAL CROWNED, XT25 BUSHING	1.250in HOLLOW BORE	1.500in HOLLOW BORE
		A001CP-10148	A001CP-10126
45	PULLEY, 6in OD, 6in FW, 1.438in X 12.75in END TAPPED THRU SHAFT, RADIAL CROWNED, WELDED HUB	A001CP-10116	
46	ROLLER, 3.5in OD, NO GRV, 0.984in SHAFT OD, 5/16"-18 FEMALE THREADED, 7in BF, HEAVY DUTY, RADIAL CROWNED	A001RL-10275	
47	ROLLER, 3.5in OD, NO GRV, 0.984in SHAFT OD, 5/16"-18 FEMALE THREADED, 7in BF, HEAVY DUTY	A001RL-10274	
48	MOUNTED BEARING, 1.438in ID, 2 BOLT FLANGE, SERIES 207	A003BR-10040	
49	MOUNTED BEARING, 2in BORE, 4 BOLT FLANGE, 210 SERIES, SETSCREW LOCKING	A003BR-10036	
50	SHAFT, 1.438in OD, 12in L, FULLY KEYED, 1045 STEEL	A013SC-10007	
51	SPROCKET, ANSI #50 ROLLER CHAIN, 30 TEETH, 1.438in ID, STEEL	A001CP-10114	
52	ANSI #50 ROLLER CHAIN, 105 PITCHES, 65.625in L	A013CH-10002	
53	CONNECTING LINK, ANSI #50 ROLLER CHAIN, SLIP FIT	A013CH-10001	
54	SLIDER BLOCK, ROLLER AC HEAVY DUTY DRIVE, UHMW	Z022RC-10001	
55	AIR CYLINDER, 3.25in BORE, 50in STROKE, 1in ROD, 3/4"-10 UNC ROD END THREAD, DOUBLE ACTING, FRONT FLANGE MOUNT, CUSHIONS BOTH ENDS, NFPA TIE-ROD INTERCHANGEABLE	A015PA-10007	
56	MUFFLER, 1/2" NPTM, SINTERED BRASS, LOW PROFILE	A016FT-10030	
57	ELBOW, 1/2" NPT MALE TO 3/8" PUSH	A016FT-10034	
58	FILTER REGULATOR, 3/8" NPT, SEMI-AUTO DRAIN, WITH BRACKET, WITH PRESSURE GAUGE, 145PSI MAX, WITH REFLUX VALVE	A016RE-10009	
59	3/2 LOCKOUT VALVE, 3/8" NPT, G SERIES, 300 SIZE	A016VA-10041	
60	FLOW-THROUGH BRACKET, T SHAPE, FOR G SERIES REGULATORS, 300 SIZE	A016FT-10028	
61	FITTING, STRAIGHT, 3/8" NPTM X 3/8" OD TUBE	A016FT-10031	
62	PROX, M18 X 1 FLUSH MOUNT TO 3 PIN M12 CONNECTOR, 60mm L, 8mm SENSING RANGE, PNP, NORMALLY OPEN, 2 LOCK NUTS	A002SE-10030	
63	GEARMOTOR, WITH BANJO TORQUE ARM	SEE Appendix 1: Standard Gearmotor Options	
64	HANGER BOLT, 3/8"-16 UNC X 1 5/8"L, BLACK OXIDE, FULL THD, 0.22" HOLE DIAMETER	A003EB-10005	
65	RUBBER BUMPER, #10-32, 0.25in THREAD DEPTH, NEOPRENE RUBBER	A003RC-10001	
66	MOUNTED BEARING, 1.25in BORE, 2 BOLT FLANGE, UCFT	A003BR-10011	
67	PULLEY, 6in OD, 6in FW, 1.250in X 11.75in END TAPPED THRU SHAFT, WELDED HUB	A001CP-10125	
68	DIE SPRING, 0.75in ID, 1.5in OD, 6in L, 531lb MAX LOAD, 304 lb/in RATE, CHROME SILICON, RED	A003SG-10019	
69	NYLON TUBE, 0.75in OD X 0.032in WALL, 7 1/2"L	A012PL-10089	
70	ASM, TENSIONER SCREW, ROLLER AC LIGHT DUTY DRIVE	Z020RA-10096	

71	WELD, TENSION INDICATOR, ROLLER AC LIGHT DUTY DRIVE	Z023RW-10005
73	BELTING	CONTACT BSC FOR BELT LENGTH AND PART NUMBERS
74	SPRING, URETHANE, 0.23in ID, 0.75in OD, 1.00in L, SHORE 60A	A003SG-10018
75	PEM, ROLLER AC MODULE, SPRING LOWER PRESSURE PLATE	Z021RP-10006
76	PRESSURE PLATE, ROLLER AC MODULE, SPRING, UPPER	Z022RC-10136
77	CARRIAGE BOLT, 3/8"-16 UNC, GR5, ZINC PLATED, 3"L, PARTIAL THD	A003CB-00076
78	SAE FLAT WASHER, 3/8" SCREW SIZE, 0.81" OD, ZINC PLATED	A003SW-00011
79	NUT, NYLOCK, 3/8"-16 UNC, GR5	A003LN-00011
80	ASM, ROLLER AC, LR SPRING PRESSURE PLATE	Z020RA-10092
81	ROLLER, 3.5in OD, NO GRV, 11/16" HEX, 7in BF, HEAVY DUTY, RADIAL CROWNED	A001RL-10234
82	SKATEWHEEL, 1.938in OD, 0.25in BORE	A005SK-10001
83	PEM, ROLLER AC MODULE, SPRING LOWER PRESSURE PLATE, SKEW TRANSITION	Z021RP-10009

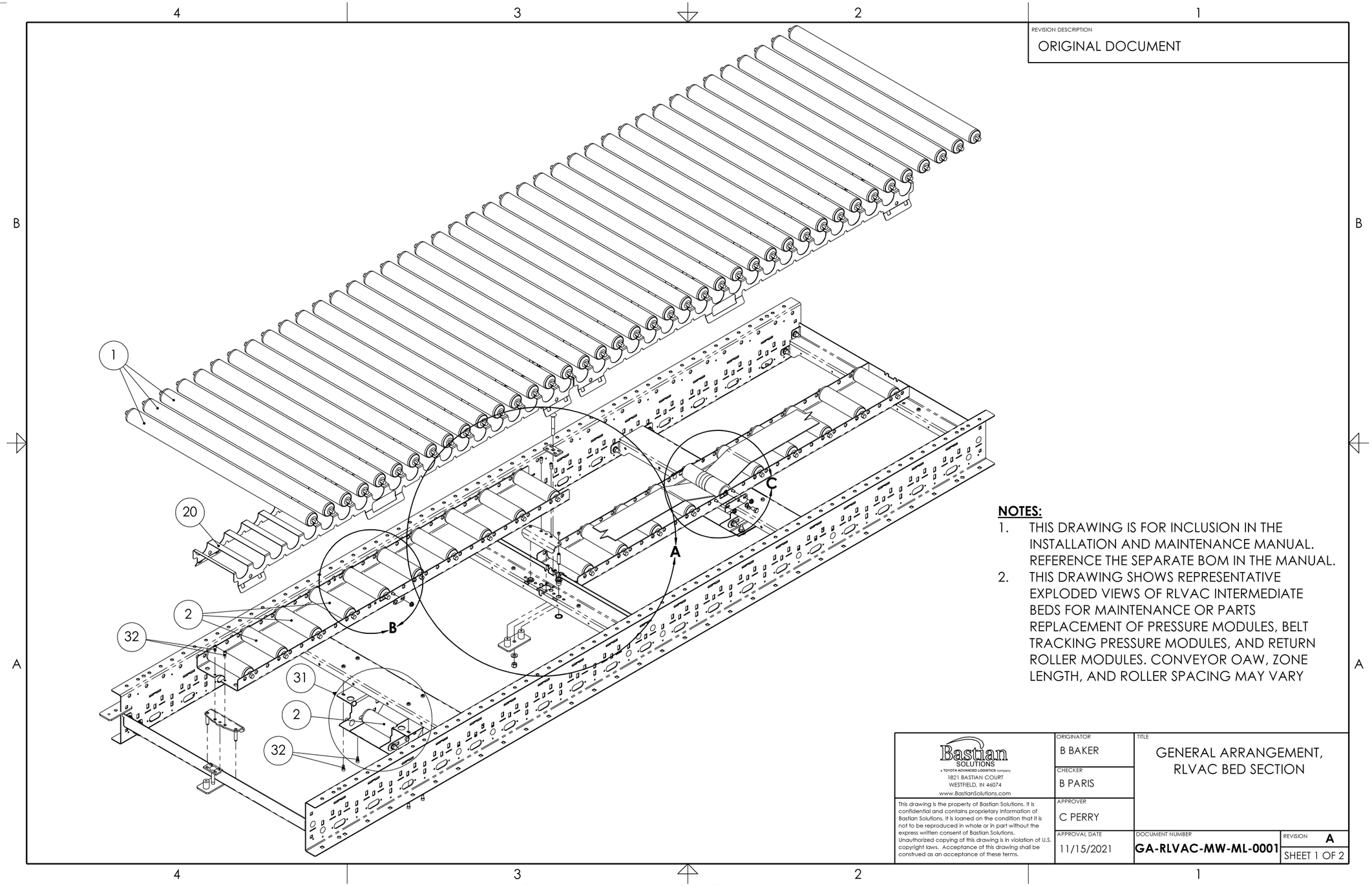

Figure 27: General Arrangement, RLVAC Bed Section, Sheet 1 of 2

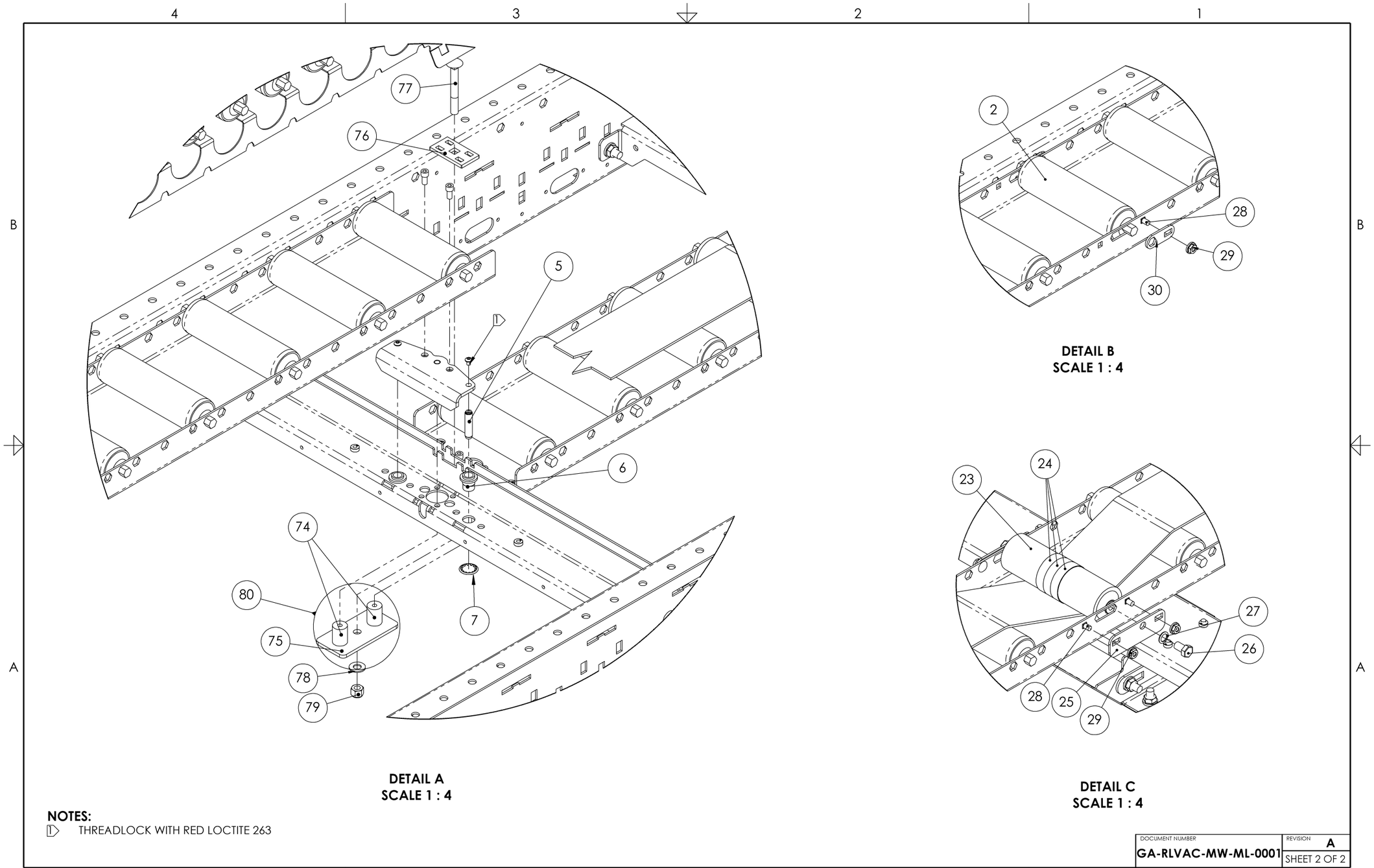

Figure 28: General Arrangement, RLVAC Bed Section, Sheet 2 of 2

REVISION DESCRIPTION
ORIGINAL DOCUMENT

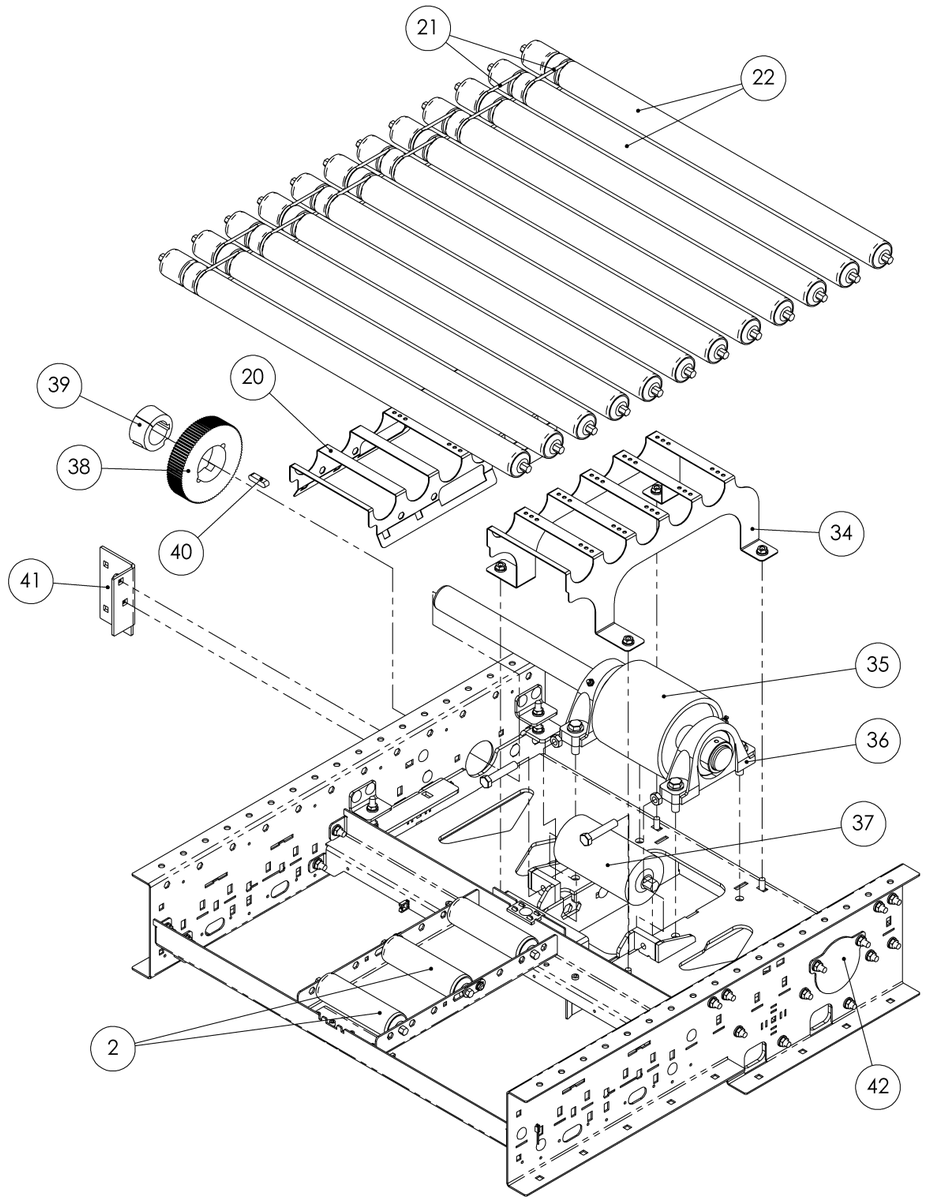

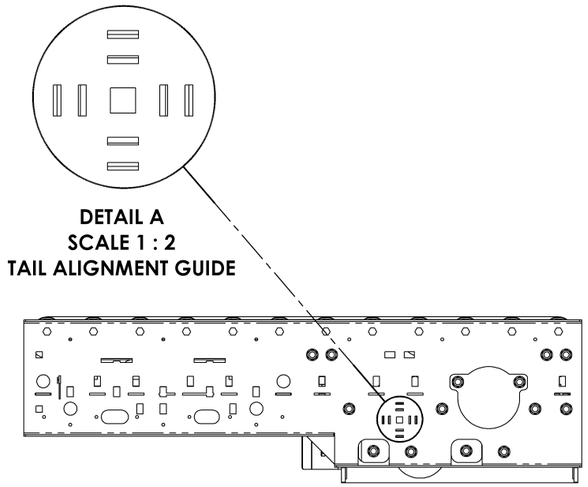

NOTES:

1. THIS DRAWING IS FOR INCLUSION IN THE INSTALLATION AND MAINTENANCE MANUAL. REFERENCE THE SEPARATE BOM IN THE MANUAL.
2. THIS DRAWING SHOWS A REPRESENTATIVE EXPLODED VIEW OF THE RLVAC TAIL SECTION FOR MAINTENANCE OR PARTS REPLACEMENT OF TAIL PULLEYS, BEARINGS, AND SNUB ROLLERS. CONVEYOR OAW, ROLLER SPACING, AND TAIL PULLEY PTO CONFIGURATION MAY VARY.
3. DETAIL A SHOWS RELATIVE ALIGNMENT BETWEEN THE TAIL WELDMENT AND THE TAIL SIDEFRAMES. IF THE CENTER SQUARE HOLE IS FLUSH, THE WELDMENT IS ALIGNED TO THE SIDEFRAME. IF ONE OF THE INNER SLOTS NEXT TO THE SQUARE HOLE IS FLUSH, THE PARTS ARE MISALIGNED BY 1/32", AND IF ONE OF THE OUTER SLOTS IS FLUSH, THE PARTS ARE MISALIGNED BY 1/16".

Bastian SOLUTIONS a TOYOTA ADVANCED LOGISTICS company 1821 BASTIAN COURT WESTFIELD, IN 46074 www.BastianSolutions.com	ORIGINATOR B BAKER	TITLE GENERAL ARRANGEMENT, RLVAC TAIL
	CHECKER B PARIS	
This drawing is the property of Bastian Solutions. It is confidential and contains proprietary information of Bastian Solutions. It is loaned on the condition that it is not to be reproduced in whole or in part without the express written consent of Bastian Solutions. Unauthorized copying of this drawing is in violation of U.S. copyright laws. Acceptance of this drawing shall be construed as an acceptance of these terms.	APPROVER C PERRY	
	APPROVAL DATE 11/18/2021	DOCUMENT NUMBER **GA-RLVAC-MW-36-0001**
		REVISION **A** SHEET 1 OF 1

Figure 29: General Arrangement, RLVAC Tail, Sheet 1 of 1

REVISION DESCRIPTION
ORIGINAL DOCUMENT

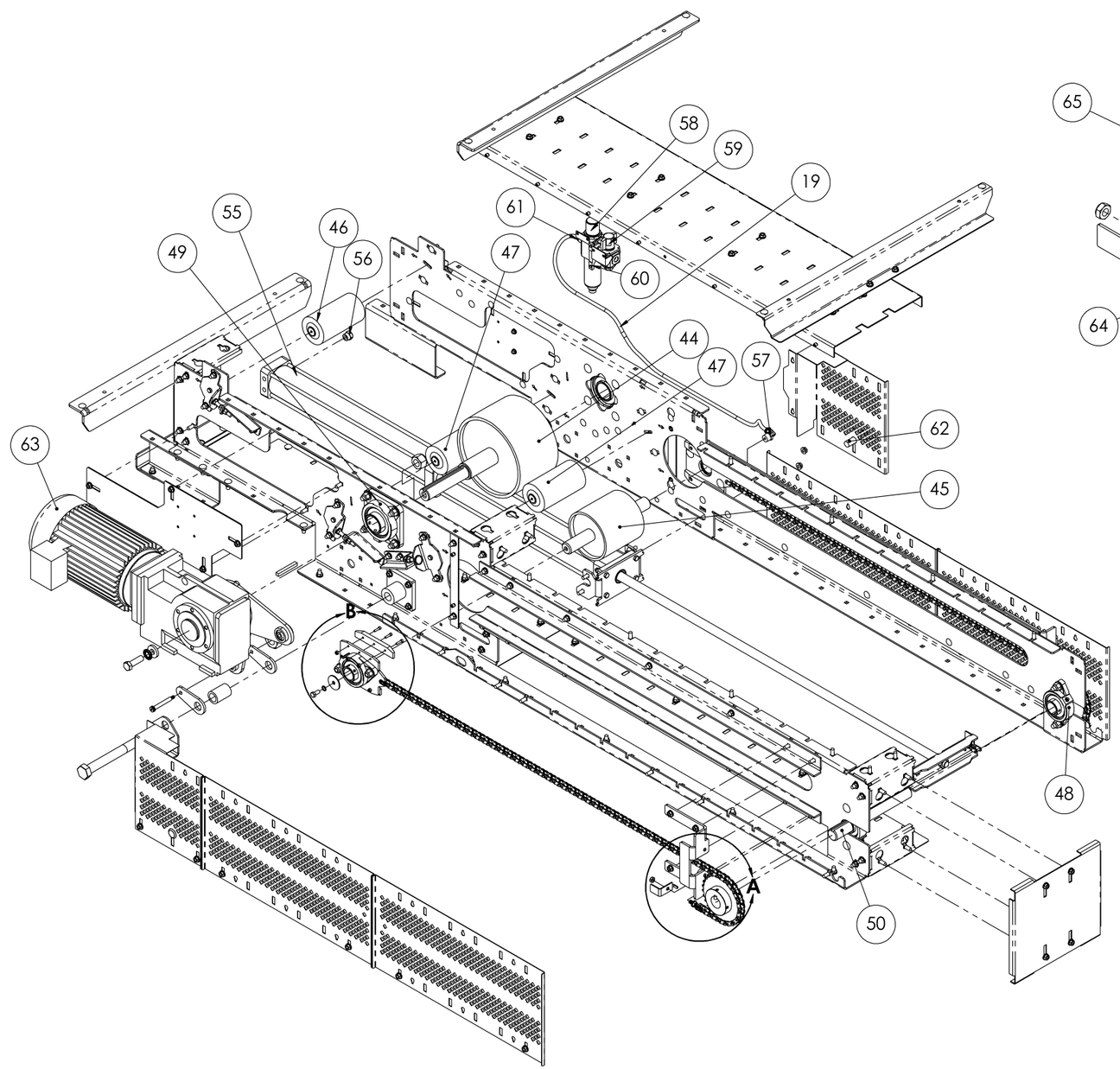

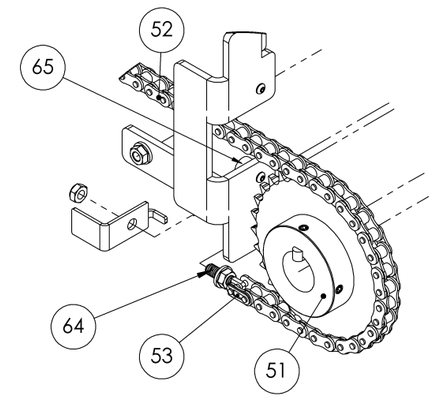

DETAIL A
SCALE 1 : 4

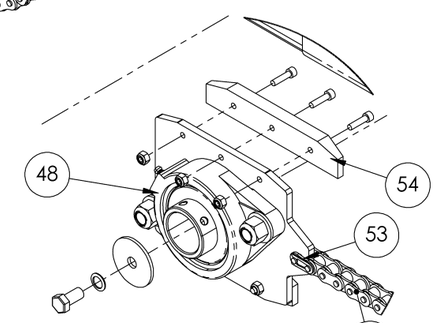

DETAIL B
SCALE 1 : 4

NOTES:

1. THIS DRAWING IS FOR INCLUSION IN THE INSTALLATION AND MAINTENANCE MANUAL. REFERENCE THE SEPARATE BOM IN THE MANUAL.
2. THIS DRAWING SHOWS A REPRESENTATIVE EXPLODED VIEW OF THE BELT UNDER ROLLER PNEUMATIC TAKEUP DRIVE ASSEMBLY FOR MAINTENANCE OR PARTS REPLACEMENT OF PULLEYS, BEARINGS, MOTORS, AIR CYLINDERS AND RELATED PARTS. MOTOR SIDE AND MOTOR SELECTION MAY VARY.

Bastian SOLUTIONS a TOYOTA ADVANCED LOGISTICS company 1821 BASTIAN COURT WESTFIELD, IN 46074 www.BastianSolutions.com	ORIGINATOR B BAKER	TITLE GENERAL ARRANGEMENT, BELT UNDER ROLLER AC PNEUMATIC TAKEUP DRIVE
	CHECKER B PARIS	
This drawing is the property of Bastian Solutions. It is confidential and contains proprietary information of Bastian Solutions. It is loaned on the condition that it is not to be reproduced in whole or in part without the express written consent of Bastian Solutions. Unauthorized copying of this drawing is in violation of U.S. copyright laws. Acceptance of this drawing shall be construed as an acceptance of these terms.	APPROVER C PERRY	
	APPROVAL DATE 11/10/2021	DOCUMENT NUMBER GA-RZPAC-MW-ML-0006 — REVISION A — SHEET 1 OF 1

Figure 30: General Arrangement, Belt Under Roller AC, Pneumatic Takeup Drive, Sheet 1 of 1

REVISION DESCRIPTION
ORIGINAL DOCUMENT

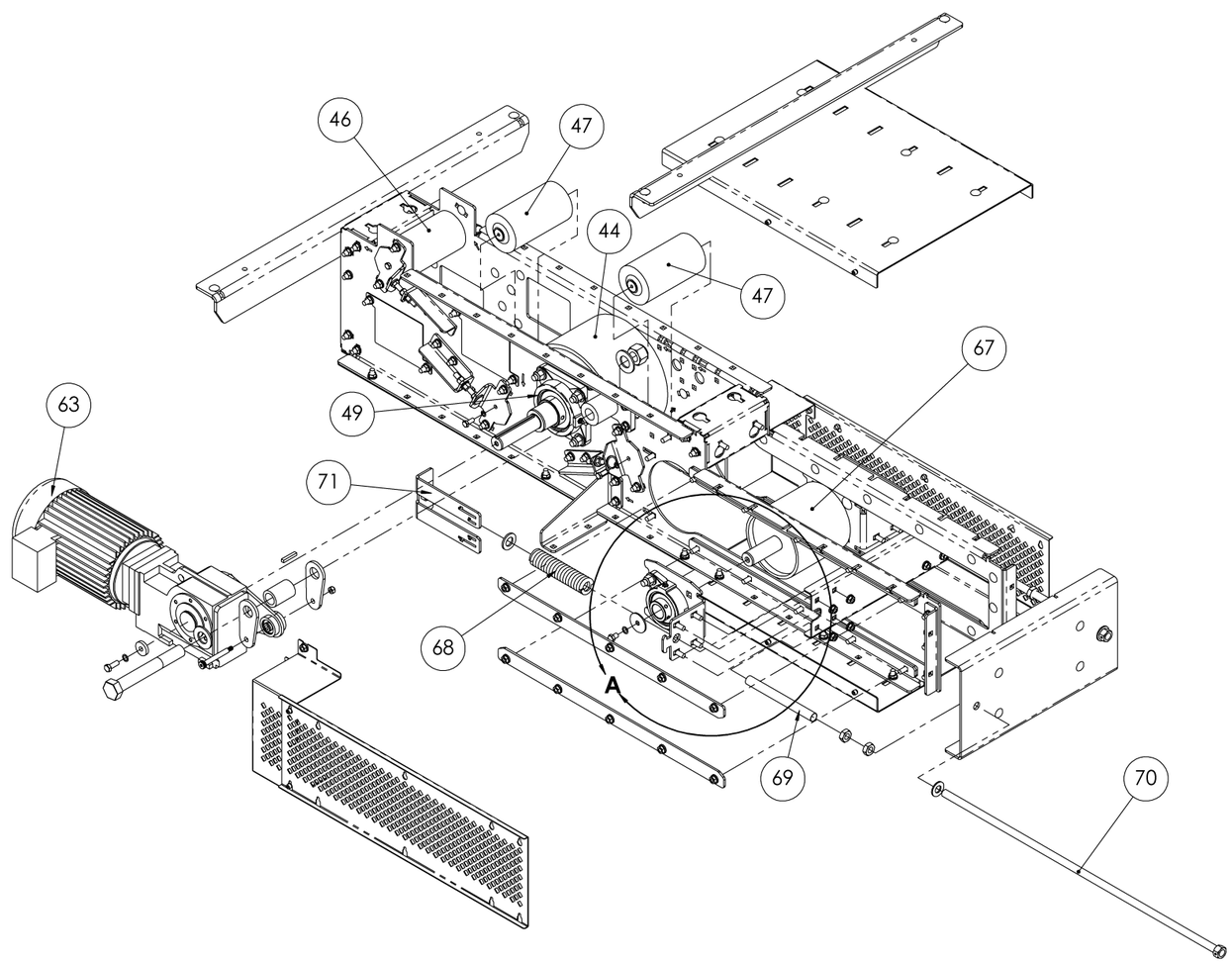

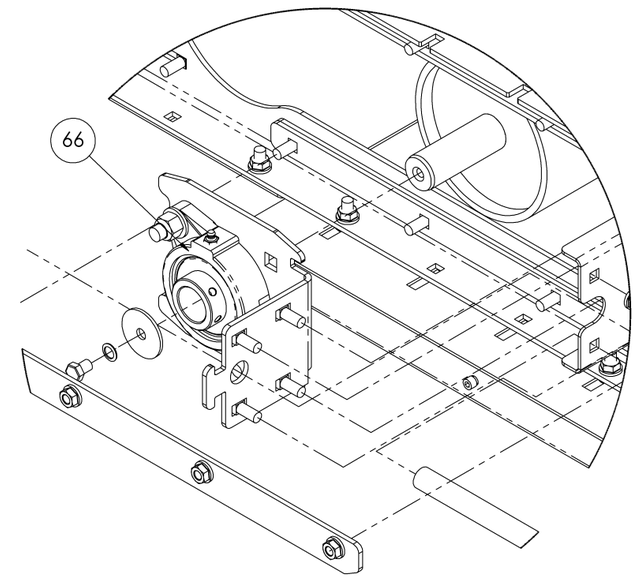

DETAIL A
SCALE 1 : 4

NOTES:

1. THIS DRAWING IS FOR INCLUSION IN THE INSTALLATION AND MAINTENANCE MANUAL. REFERENCE THE SEPARATE BOM IN THE MANUAL.
2. THIS DRAWING SHOWS A REPRESENTATIVE EXPLODED VIEW OF THE BELT UNDER ROLLER SCREW TAKEUP DRIVE ASSEMBLY FOR MAINTENANCE OR PARTS REPLACEMENT OF PULLEYS, BEARINGS, MOTORS, AND RELATED PARTS. MOTOR SIDE, MOTOR SELECTION, AND INPUT SHAFT SIZE MAY VARY.

Bastian SOLUTIONS
a TOYOTA ADVANCED LOGISTICS company
1821 BASTIAN COURT
WESTFIELD, IN 46074
www.BastianSolutions.com

ORIGINATOR	B BAKER
CHECKER	B PARIS
APPROVER	C PERRY
APPROVAL DATE	11/10/2021
TITLE	GENERAL ARRANGEMENT, BELT UNDER ROLLER AC, SCREW TAKEUP DRIVE
DOCUMENT NUMBER	GA-RZPAC-MW-ML-0007
REVISION	A
	SHEET 1 OF 1

Figure 31: General Arrangement, Belt Under Roller AC, Screw Takeup Drive, Sheet 1 of 1

Bastian Solutions Conveyor Installation and Maintenance Manual
Model: RLVAC

Bastian Solutions, LLC
1821 Bastian Court
Westfield, IN 46074

Customer Support: ConveyorSupport@BastianSolutions.com