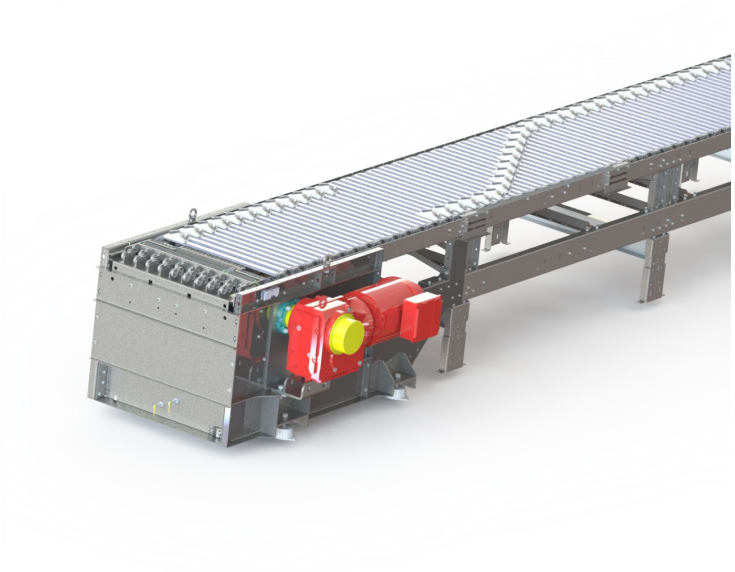

Installation and Maintenance Manual

Model: Shoe Sorter

Effective February 2022

Rev. D

Bastian SOLUTIONS

a TOYOTA ADVANCED LOGISTICS company

Contributions

ROLE	NAME	TITLE
Author	Ben Baker	Senior Design Engineer
Checker	Evan Grimes	Customer Service Engineer
Approver	Sam Osterhout	Design Team Lead

Revisions

DATE	REVISION	REVISION DESCRIPTION	AUTHOR
10/21/2019	A1	Initial document creation	Ben Baker
9/22/2020	B	Added info on sprocket alignment and replacement; added info about decel settings; crash gates added to installation section; added tailshaft encoder info to Controls section; added several part numbers to GA drawings. Changed all references to “ZiPline” to “BSC” or “Bastian Solutions Conveyor”.	Ben Baker
5/3/2021	C	Updated GA drawing for divert switch; revised distance recommendations between knife edge and sorter infeed; revised torque callouts on shoe bolts.	Ben Baker
10/12/2021	C1	Reformatting and Brand Update	Katie Smith
1/7/2022	Review D	MKT final review	Mark Fishback
2/18/2022	D	Document Formatting	Andrew W. Jones

Term and Acronym Definitions

TERM/ACRONYM	DEFINITION
AC	Alternating current
Accumulation	The collection or staging of multiple cartons, cases, or totes of product on conveyor.
Back pressure	Pressure against carton(s) in the direction of carton flow resulting from weight of densely accumulated cartons.
BF	Between frame; this refers to the distance between conveyor bed side frames.
BHCS	Button head cap screw
BOM	Bill of Materials
BRBDC	Belted Roller Bed Direct Current; DC roller conveyor format driven by brushless DC servo motors.
BSC	Bastian Solutions Conveyor
Carton or Case	Term for conveyable items generally contained in cardboard boxes.
CB	Carriage bolt
CCW	Counter-clockwise
CW	Clockwise
DC	Direct current
DC Card	A control card used to power and control the logic used when operating a MDR in DC conveyor applications.
Diffuse	A photoeye format that houses both the emitter and receiver and senses an object when the light beam is reflected back to the sensor. This type of photoeye is a standalone unit and does not use reflectors.
Discharge	The point where cartons, cases, or totes exit a conveyor or similar unit used in a material handling system.
Divert	(noun) A conveyor unit used to change the direction of a carton, case, or tote in a controlled manner. (verb) To change the direction of a carton, case, or tote in a controlled manner.
Drive Pulley	A motor-driven pulley used to transmit rotational energy to linear motion in AC belts.
E-stop	A highly visible button or pull cable designed to shut down equipment in the case of an emergency.
ETO	Engineered to Order; Orders requiring custom Engineering
FAT	Factory Acceptance Testing
Flange	A feature in sheet metal consisting of a face and bend connected to an existing face along a straight edge.
Gapping	The separation of cartons, cases, or totes which are initially in contact with one another. Generally done by progressively increasing the speed of consecutive zones, forcing cartons, cases, or totes to "pull a gap."

TERM/ACRONYM	DEFINITION
Guide Rail	Mechanism used to maintain the desired position of conveyable cartons, cases, or totes on their respective conveying surface.
HHCS	Hex head cap screw
HMI	Human-Machine Interface; an operating console or control panel of a conveyor system.
HTL	High Threshold Logic. In the context of an encoder, a differential push-pull output intended to operate on 24VDC.
ID	Inner diameter of a circular, cylindrical or arced body.
Idler Roller	Cylindrically-shaped material handling component that is unpowered and used to support a belt.
Infeed	The point where cartons, cases, or totes enter a conveyor or similar unit used in a material handling system.
LOTO	Lockout Tagout
Mark Number	A numeric or alphanumeric term used to uniquely identify a conveyor bed or collection of beds (of similar model type) within a material handling system.
Match	A mark made on mating conveyor assemblies to assist in identifying orientation and placement within a system.
MDR	Motorized drive roller; DC powered conveyor roller with an internally mounted motor which may be controlled via internal or external commutation.
MSD	Master specification document; a document used to describe a product's intended capabilities, appearance, and interaction with users.
NO	Normally Open
OAW	Overall width of any given conveyor bed.
OD	Outer diameter of a circular, cylindrical, or arced body.
O-Ring	A plastic ring with a circular cross section used for power transmission in DC conveyor applications.
OSHA	Occupational Safety and Health Administration
OTD	On-Time Delivery
Photoeye	Device used to detect the presence of an object-such as a carton, case, or tote-by use of an emitter and receiver (not necessarily in the same unit as one another).
PM	Project Management (or Project Manager)
PO	Purchase Order
PPE	Personal protective equipment
Proximity Sensor (“Prox”)	A sensor able to detect the presence of nearby objects without any physical contact. Typically an inductive sensor that detects nearby electrically conductive (metal) objects.
Pulley	Mechanical device used to change the direction of the belt in a conveyor system, to drive and/or tension the belt.

TERM/ACRONYM	DEFINITION
Reflector	A reflective component needed for retroreflective photoeyes to receive transmitted light or radiation when no object is in front of the photoeye.
Retroreflective	Of or relating to a surface or device that reflects light or other radiation back to its source.
Return Idlers	Belt-routing rollers on the underside of any given AC conveyor.
RLSDC	Roller Live Spur Direct Current; DC roller conveyor powered by live MDRs and configured as a spur.
Roller	Powered or unpowered cylindrically-shaped material handling component used for mechanical power transmission, a conveying surface, and/or support for a belted conveying surface.
Shingling	Event in which surfaces of adjacent cartons, cases, or totes are forced to lift off the conveyor due to elevated uneven carton, case, or tote back pressure.
Shoe	A sliding element that engages with cartons, cases, or totes to divert from a shoe sorter onto a spur.
Side Cover	A PVC cover used to conceal and protect electrical components and wiring from foreign debris and moving obstacles.
Side Frame	Structural member used to support rotating components needed for conveyor beds.
Singulation	The active separation of cartons, cases, or totes.
Skatewheel	Small unpowered wheels used to replicate nearly frictionless guidance or support of conveyable cartons, cases, or totes.
Skew	A format of DC conveyor where one end of all rollers are shifted one roller position to provide an angled conveying surface for left or right justification of cartons, cases, or totes.
SKU	Stock Keeping Unit; Product and service identification code for a product (i.e. bar code).
Slug	Collection of two or more cartons, cases, or totes that are in contact with one another.
Snub Roller	A roller or pulley mounted to increase the arc of contact between a belt and drive pulley. Additionally, this can be used to change the direction of the return belt travel.
Sorter	Any piece of conveyance equipment used to divert a series of cartons, cases, or totes simultaneously.
Splice Assembly	A five-component assembly-consisting of a plate (or formed plate), two bolts, and two nuts-that is used to secure a piece of guide rail to an adjacent piece of guide rail, or a side frame to an adjacent side frame. This is used to provide additional structural rigidity and ensure relative position of components is maintained.
SPST	Single Pole Single Throw; a type of electrical switch.
Spur	A format of DC conveyor used to create linear transitions into intersecting lines of conveyor positioned at a non-perpendicular angle. Typically includes 30deg and 22deg configurations.

TERM/ACRONYM	DEFINITION
Tail Pulley	A non-driven pulley located at the tail end of the conveyor.
Takeup Pulley	Pulley with an adjustable position used to eliminate unnecessary slack in a belt.
Takeup Screws	Adjustment screw used to adjust the position of a takeup pulley.
TOCS	Top of Conveying Surface; this refers to the elevation of the conveying surface with respect to the floor on which the conveyor is sitting. Interchangeable with TOR but applicable to non-roller conveyors as well.
TOR	Top of roller; this refers to the elevation of the conveying surface with respect to the floor on which the conveyor is sitting.
Track	To adjust the position of conveyor components in such a way that engourages proper belt alignment on a system.
Tracking Bands	Thin plastic bands installed on head or secondary drive roller to help keep DC format conveyor belts tracked.
UHMW	Ultra-high molecular weight polyethylene
VFD	Variable Frequency Drive. An electronic variable-speed control for an AC induction motor.
Waterfall	Method of overlapping guide rail such that cartons, cases, or totes cannot catch on downstream guide rail.
Wiz Nut	A serrated flange nut used to cut into the surface of the component it is tightened against.

Table of Contents

List of Figures

List of Tables

Reference Documents

MANUFACTURER	DOCUMENT TITLE	DOCUMENT NUMBER	URL
Teknic, Inc.	ClearPath MC/SD User Manual Rev.3.05	N/A	**https://www.teknic.com/files/downloads/clearpath_user_manual.pdf**
Teknic, Inc.	AC ClearPath-MC/SD User Manual Rev.3.06	N/A	**https://www.teknic.com/files/downloads/ac_clearpath-sc_manual.pdf**
The Diamond Chain Company	Diamond Chain Maintenance Guide	11255_201903	**https://www.diamondchain.com/wp-content/uploads/2017/03/catalogs/maintenance-guide/maintenance-guide.pdf**
The Diamond Chain Company	Diamond Series Product Catalog	DC1000-201905	**https://www.diamondchain.com/wp-content/uploads/2018/01/2019_Diamond_Chain_Catalog_links.PDF**
The Diamond Chain Company	Roller Chain Wear Gauge Instructions	DCWG-2013	N/A
ABB Motors and Mechanical, Inc. (formerly Baldor Electric Company)	Instruction Manual for DODGE® Setscrew, Eccentric Collar, D-Lok, H-E Series, E-Z Kleen, Ultra Kleen and Food Safe Mounted Ball Bearings	MN3016	**https://www.baldor.com/mvc/DownloadCenter/Files/MN3016**
ifm Efector, Inc.	Operating instructions Retro-reflective sensor (OGP7xx)	80284283 / 00	**https://www.ifm.com/mounting/80284283UK.pdf**
Insight Automation	EZ24 Family Reference Manual	PR-1100	**https://www.pulseroller.com/files/NA/Control%20Literature%20&%20Drawings/EZ-24/Users%20Manual%20and%20Specifications/Users_Guide.pdf**
SEW Eurodrive	Operating Instructions (AC Motors DR..71-315, DRN63-315, DR2..63-80)	24745332/EN	**https://download.sew-eurodrive.com/download/pdf/24745332.pdf**
SEW Eurodrive	Assembly and Operating Instructions (Gear unit series R..7, F..7, K..7, K..9,	21932786/EN	**https://download.sew-eurodrive.com/download/pdf/21932786.pdf**

MANUFACTURER	DOCUMENT TITLE	DOCUMENT NUMBER	URL
	S..7, SPIROPLAN® W)		
Bijur Delimon International	SureFire II Lubricator Automatic, Oil & Fluid Grease, Single Phase	36410	**http://www.bijurdelimon.com/fileadmin/products/docs/bdius/Datasheets/36410_LUB_SureFire-II-PDI-SLR_DS-R2.pdf**
Bijur Delimon International	Operators Manual Controller,SureFire II (Single Phase PDI - SLR(24VDC, 115VAC & 230VAC))	36412	**http://www.bijurdelimon.com/fileadmin/bdide/downloads/36412_SureFire-II_Controller_OM_2017_1_GB.pdf**
Bijur Delimon International	SureFire II Lubricator Quick Start Manual	71070	**http://www.bijurdelimon.com/fileadmin/products/docs/bdius/Operator-Manuals/71070_SureFire-II-Quick_Start_QS-R3.pdf**

1 Introduction

Thank you for choosing Bastian Solutions conveyor. The following manual serves as a guide for installation, part replacement, and general maintenance for your material handling equipment. It is important to read the manual and follow any instructions as it provides important safety information for personnel and will maximize the longevity of the conveyor.

The information contained in this manual applies only to the products described. Uses, activities, or processes related to installing or maintaining the equipment that are not explicitly described in this manual are considered out of scope. Please contact Bastian Solutions for any questions or support that is not clearly addressed in this document. Bastian Solutions is not responsible for misuse of the equipment described in this manual or misuse of information in this manual. If you have any questions, contact Bastian Solutions Customer Service at **ConveyorSupport@BastianSolutions.com**.

2 OSHA And Safety

BSC is not responsible for ensuring that conveyors used in a system abide by OSHA standards. Safety is of primary importance to our company, but as a product distributor we ask that system integrators and end users conform with all applicable OSHA standards. We encourage that all warnings in this manual are followed to avoid unnecessary risk.

3 Model: Shoe Sorter

The BSC Shoe Sorter is a slat conveyor with movable shoes that slide laterally on the slats when diverted by rails below the conveying surface. The shoe sorter is used for high-speed, high-volume primary sortation, and is optimized for conveyance of cartons and totes.

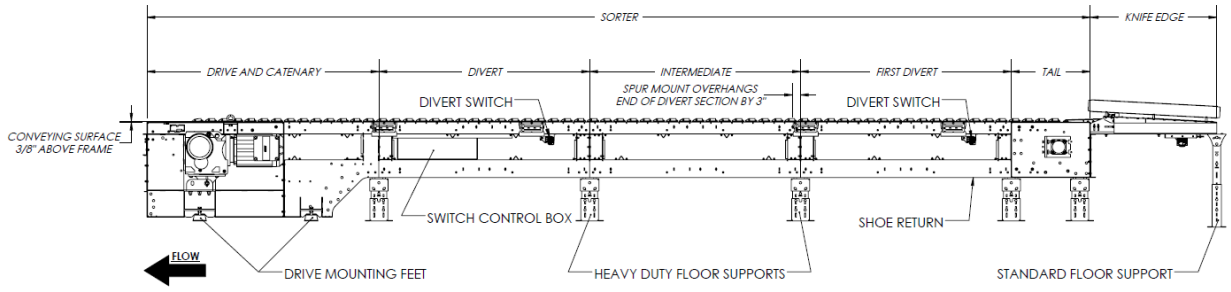

Figure 1-Shoe Sorter Section Types and General Arrangement

Figure 1 shows a side view of an example shoe sorter. Product flows over an induction conveyor, containing at least a knife edge transition belt, but commonly also containing one or more gapper conveyors to set correct product spacing. The product then flows across the sorter, which contains one or more divert sections. Each divert section will mate to a spur and a takeaway conveyor line. Products that do not get diverted will continue down the length of the sorter onto discharge conveyor.

4 Receiving

Upon delivery of any Bastian Solutions conveyor, please review and check the following:

- The quantity of items received against the Bill of Lading.
- Complete a visual inspection of equipment to determine any damage that may have occurred during shipping. If damage is present, document with pictures.
- Review Mark Number information and layout locations. More information can be found in subsection 4.1.

If there are any missing or damaged components contact your Bastian Solutions' conveyor representative with as much detail as possible. If you are unsure of your Bastian Solutions' conveyor representative, please contact Bastian Solutions Customer Service at **ConveyorSupport@bastianbolutions.com**.

4.1 Mark Numbers

A mark number is a specific number given to a piece of equipment. A mark number is usually made up of a single product line (RZPDC, RLVDC, BZPDC, etc.) but can contain many bed section lengths. They can range from two inches to hundreds of feet in length. The mark number is used to help identify where the piece of equipment will go within the system layout.

Every bed section of conveyor will have (2) stickers. One sticker on the infeed end of the bed, and one sticker on the discharge end of the bed. Each sticker will contain the following information:

- Project Number and Name
- Model Type
- Mark Number
- Match
- Piece
- Flow

Figure 2 shows the stickers that would appear on an RZPDC that has two bed sections.

The match field on the stickers is used to indicate if two bed sections are to be spliced to one another.

Figure 2-Mark Number Stickers

As shown in Figure 2 the stickers where the two beds splice together both contain "Match: 1". The piece field defines the bed section number within the mark. The flow refers to the direction of product flow along the conveyor system.

4.2 Skid Contents

Skids will contain varying combinations of conveyor sections, support structures, accessories, and pertinent hardware. For protection of product integrity during shipping, accessories and supports may be delivered on separate, but labeled skids.

4.3 Skid Documentation

All shipments will contain a Bill of Lading for the delivery company, a skid label, and a skid manifest. Skid labels have the contents of each shipped item located on the skid. Figure 3 shows a sample of a skid label. These stickers are placed on the surface of each skid.

Figure 3-Skid Sticker

5 Installation

Ensure that your conveyor equipment has been securely fastened to the floor or other mounting surface before full operation occurs.

Consideration should be given to floor point loading prior to installation to ensure proper support of equipment. See Appendix 1 for section weights.

5.1 Mechanical Installation

5.1.1 Bed Section Placement

1. Lay out chalk lines on floor for placement – See the system layout/installation drawings.

3. Set the drive section in position. Refer to the system layout/installation drawing and Figure 1.

DO NOT pick up or move drive section using the lifting eyes on the motor or gearbox. Damage to the gearbox or drive shaft may result.

On larger units, the motor may be shipped separate from the drive unit. See SEW Eurodrive Gear Unit Assembly and Operating Instructions section 4 for installation instructions.

Secure the drive unit to the floor before installing the motor. Heavy gearmotors may cause the drive unit to become unbalanced or tip during installation.

4. Adjust the foot bolts on the drive so all four feet are in contact with the floor and the drive section is level and aligned to the chalk lines.
5. Check that the height of the drive section matches the specified height on the system layout drawing (the top of the frame is 3/8” below the final slat surface)
6. If the drive section is out of square, use the provided tension rod for squaring adjustment
7. Set each section and bolt them together, working backwards from the drive to the tail. See Figure 5 for details on fastening the sections together. Hand tighten only at this stage.
8. Check square on each section and check the straightness of the sorter before securing to the floor.

1. See Figure 4
2. Place a thin black neoprene washer between the bolt head and the flange of the sideframe.
3. Place a green urethane vibration damper between the sideframe and the floor support.

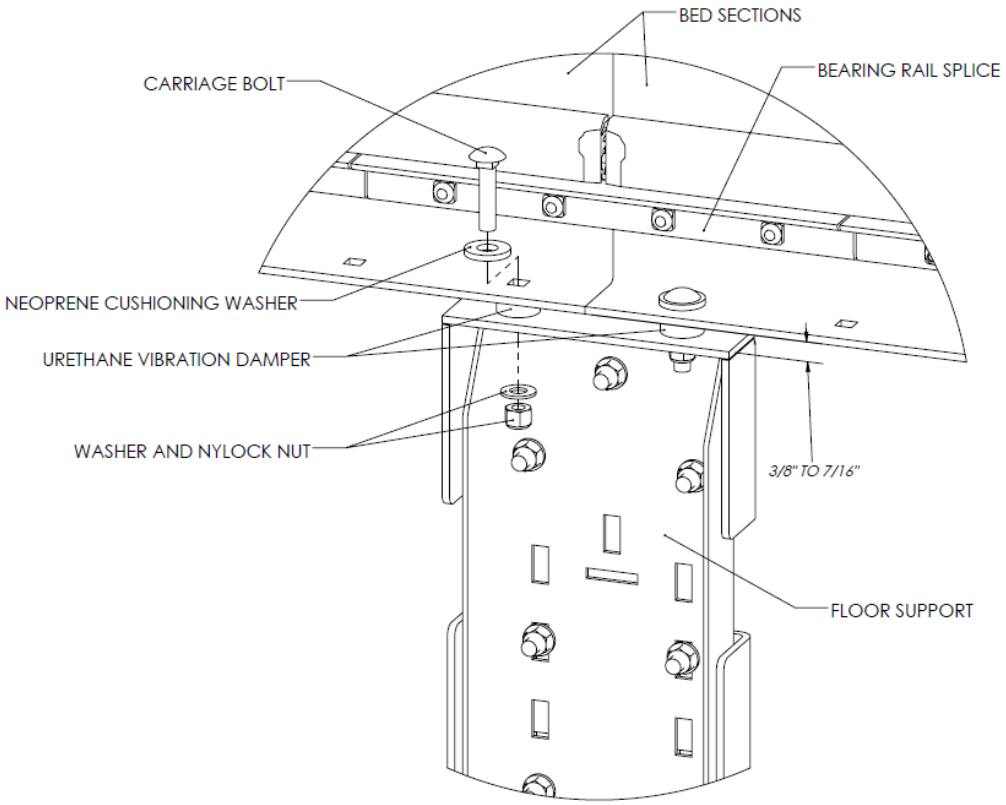

Figure 4-Floor Support Installation Detail

4. Adjust the urethane vibration damper to 3/8” to 7/16” tall (1/8” to 1/16” compression).
5. Adjust the top of conveying surface height by adjusting the floor support.

Do not use vibration dampers for height adjustment. Excessive compression can damage the vibration dampers and will increase vibrations transmitted into the floor supports.

5.1.3 Section Fastening and Rail Alignment

1. See Figure 5 for details on fastening sections together.
2. Use of a laser level is recommended to set the sorter straight and level.

The sorter must be level front-to-back, side-to side, and all sections must be aligned straight to within the tolerances specified in step 3. Misalignment can cause noisy operation and/or damage to the chain, bearings, and slats.

3. Lateral straightness tolerances must be within +/- 1/2 inch per 100 feet. Check each bed section joint to ensure there are no bumps or discontinuities (use a laser to sight from the drive to the tail).

4. Twist in the sorter bed must be limited to +/- 1/4 inch per 10 feet of sorter length, with no bumps or discontinuities and no section out-of-level by more than +/- 1/2 inch across its width.
5. Ensure the drive and tail shafts are level by placing a precision level directly on the respective shafts. See Diamond Chain Maintenance Guide section 1 for chain alignment tolerances.

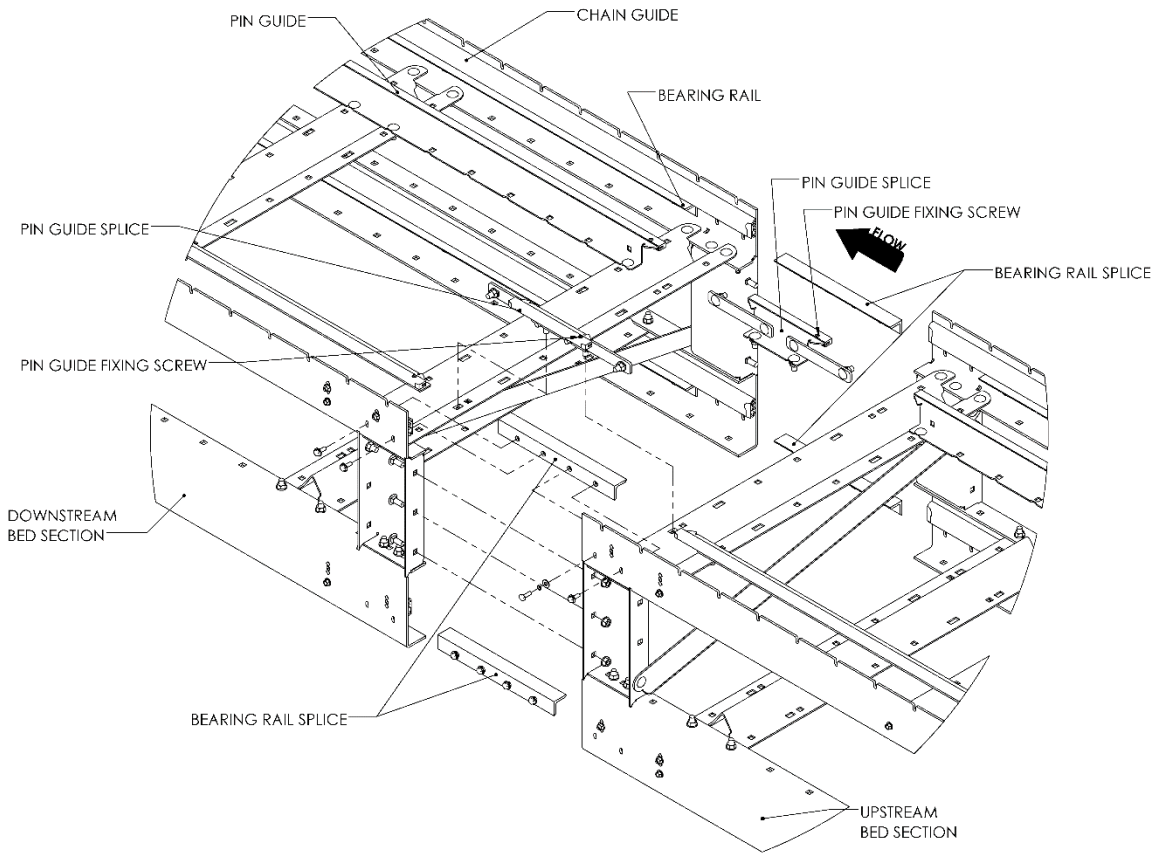

Figure 5-Bed Section Fastening Detail

6. Place a straightedge across the gap in the bearing rail between each bed section and install the bearing rail splice so that it mates with the installed bearing rail on both the upstream and downstream ends.
   a. If there are any bumps created by misalignment where the bearing rail ends meet, it will cause excessive noise during operation and, if the misalignment is severe, can damage the chain mount bearings over time.

NOTE

The bearing rail splice can also be used for pulling sections together (aligning) left-to-right. Ensure the section splice bolts are loose enough to allow movement before pulling the sections together.

7. Place a straightedge across the gap in the pin guide between bed sections and install the pin guide splice so that it mates with the installed pin guide on both the upstream and downstream ends. The pin guide and pin guide splices should be approximately centered in their mounting slots.

a. If there are any bumps created by misalignment where the pin guide ends meet, it will cause excessive noise during operation and, if the misalignment is severe, can damage the pin guide covers and the slat mounts over time.

The pin guide fixing screw is always on the upstream end with respect to chain flow. It is important to maintain this orientation, or the plastic cover could come off and cause damage.

8. Once the sections are straight and level, fully tighten all section splice bolts and secure to the floor or decking.
   a. Tighten 1/4”-20 fasteners to 8.4 ft-lb.
   b. Tighten 3/8”-16 fasteners to 31 ft-lb.
   c. Fastening hardware to secure the floor supports to the floor or decking is not provided by BSC. Consult the hardware manufacturer for appropriate torque values.

Ensure the securing method is appropriate for the application. Installations in seismic zones will generally require an independent seismic review. BSC does not provide general-purpose recommendations for concrete anchors or other fastening methods, since fastening requirements depend on the site-specific details of the mounting surface.

9. Verify straightness and level again once all sections are fully secured and all bolts are tightened. Adjust the section positioning as needed if any sections have moved out of alignment.

5.1.4 Spur Installation

1. The spur mounting brackets share mounting bolts with the chain guards. Spur locations use a chain guard piece painted standard silver color instead of safety yellow.
2. Attach the spurs to the sorter by bolting the spur to the slots in the mounting brackets using 3/8” carriage bolts.
3. Spur locations are adjustable along the length of the sorter using the provided slots.
4. Locate spurs per the system installation drawing. See Figure 6 for typical spur positioning. Spur alignment is given relative to the divert rail and the positions of installed shoes.
   a. In a typical installation, measure off the divert rail, since the slats and shoes are typically installed only after spurs have been mounted.
   b. The critical dimension (1 3/8” in Figure 6) is measured between the face of the divert rail and the inside of the spur frame, <u>perpendicular</u> to the divert rail. This measurement will locate the spur correctly on both 30° divert and 22.5° divert sorters.

Spur positioning may need to be modified for certain product types (e.g. totes with an overhanging lip may require the spur to be moved downstream so the overhanging lip can clear the downstream spur guiderail). Check and follow the system installation drawing for exact site-specific spur positioning.

5. Set spurs approximately 3/8” lower than the sorter TOCS using the spur jack bolts.
6. Tighten spur mounting bolts once spur is in its final position. See Figure 7.
   a. Tighten 3/8”-16 fasteners to 31 ft-lb.

NOTE

The provided adjustment travel is intended for optimizing the spur location relative to the divert rail. Moving the spur a large distance may cause problems diverting large packages, depending on the system layout.

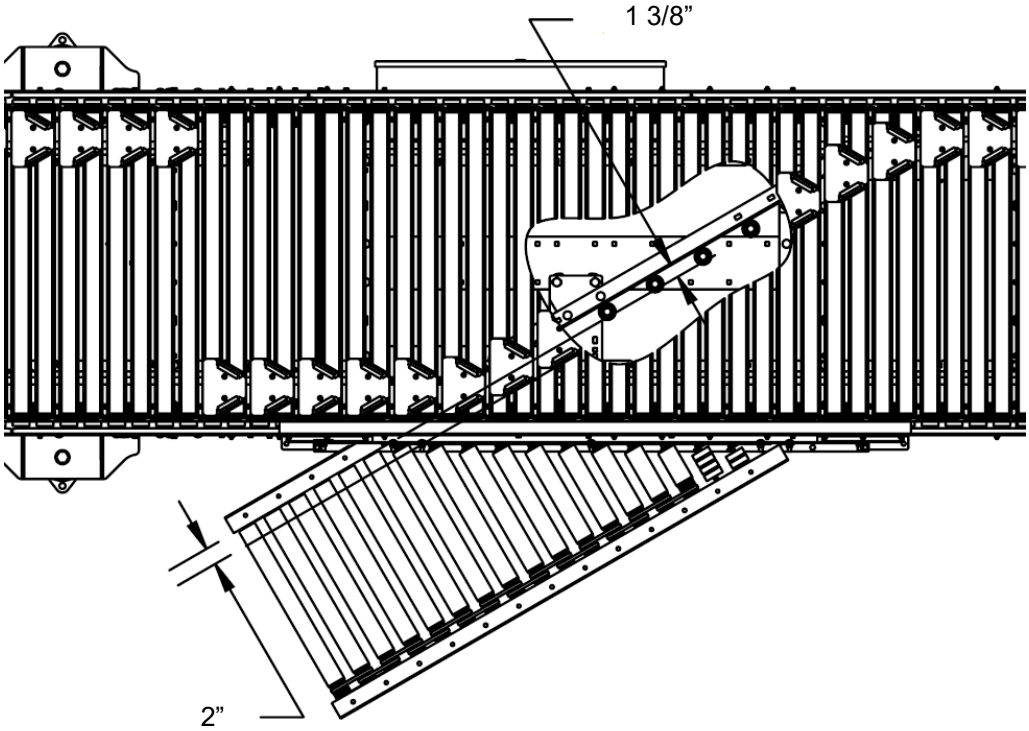

Figure 6-Typical Spur Positioning

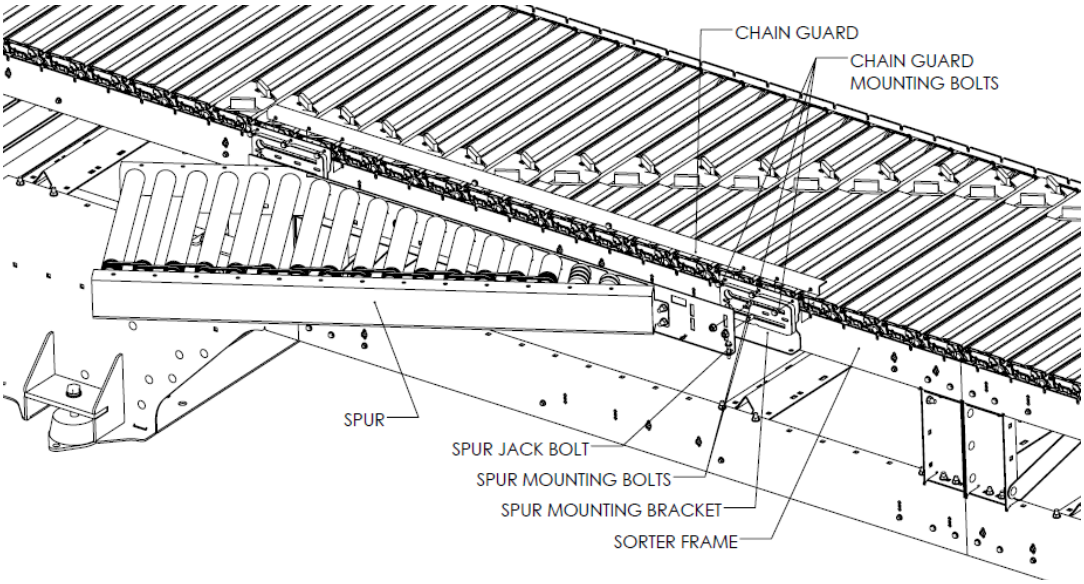

Figure 7-Spur Mounting Detail

5.1.5 Chain Installation

CAUTION

Run power to the main drive motor and verify the motor rotation direction before installing the chain. Running the sorter backwards can cause damage to slats, chain, and sorter internal components.

NOTE

The “missing bearing” fork sensor on the first divert section is easy to damage when installing the chain. Remove the sensor during chain install and replace it after chain installation is completed.

1. Remove the “missing bearing” fork sensor on the first divert. Zip tie the sensor to the underside of the first divert switch so it won’t get misplaced and will be available for re-installation after the chain is installed.
   a. See Figure 22, Figure 23, and Figure 24 in Appendix 3 for details of the “missing bearing” fork sensor mounting. The sensor is identified by balloon (6).
2. The chain comes pre-assembled with chain mounts.
3. The chain is shipped and tagged in matched pairs (right and left)
   a. Right and left sides of the sorter are determined by facing in the direction of product flow.

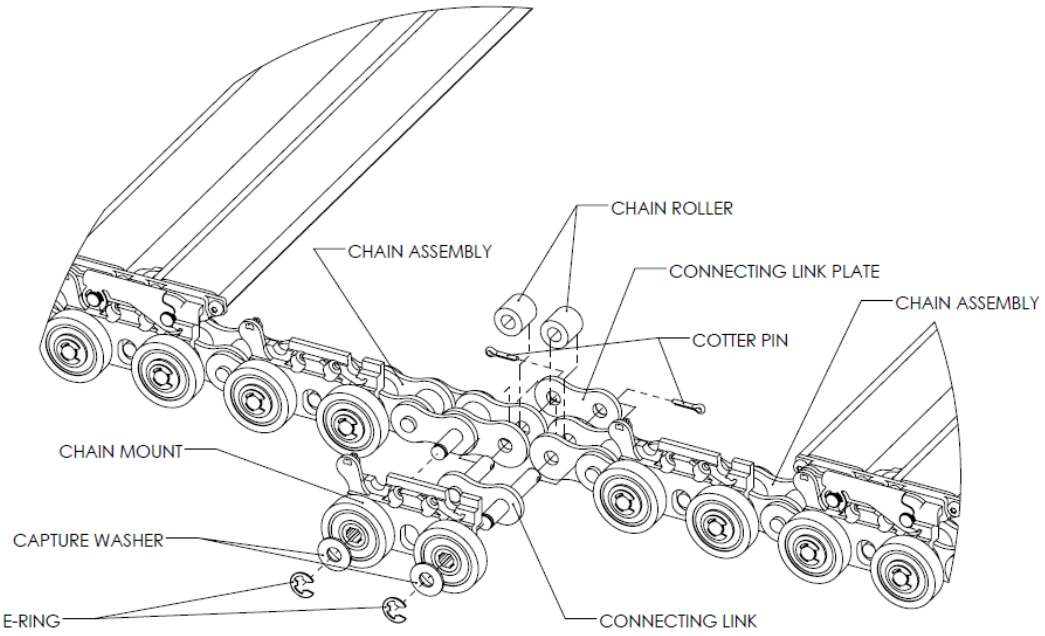

Figure 8-Chain Connection Detail

4. Always keep the matched pairs across from each other. Keep the tags on the chain until it is installed in the sorter.
5. Lay out a matched pair of chain and hold it together with one slat approximately every two feet, starting at the tail sprocket and working towards the drive.
   a. See Section 5.1.6 for instructions on slat installation.
6. Join the chain sections with a connecting link, then install the chain mounts over the connecting link section. See Figure 8.
7. Once the chain is installed on top of the sorter, use the drive sprocket to help pull the chain around.
8. Two options to turn the drive sprocket manually are:
   a. The flat on the drive shaft (use a 1-1/8” open end wrench with a cheater bar or other long handle extension)
   b. Remove the fan cover and rotate the fan of the drive motor by hand (this method is slower, but it requires lower torque due to the mechanical advantage of the gearbox)

WARNING

The drive must be locked out during chain install—do not use the drive motor to advance the chain during installation. Death or serious injury could result.

9. Attach ropes to the free end of the chain to help pull the chain through the catenary (force should be transmitted through the drive sprocket; the ropes are to correctly guide the free end).

DO NOT pull on the slats or chain mounts. Damage to the slats or chain mounts could result. Fasten any pulling devices (winches, come-alongs, etc.) directly to the chain, with the use of a suitable spreader bar to ensure the force is exerted directly along the length of the chain.

There will be, by design, one matched pair of chains that is a shorter length than the others. This pair has been factory-cut to the appropriate length for the sorter installation. As with all matched chain pairs, this pair must be kept directly across from each other.

10. Install the short length chain pair last.
11. Depending on the sorter length and the chain weight, making the last chain splice may require the use of come-alongs, ratchet straps, or other mechanical pulling devices to generate enough slack to insert the last connector link.
12. Apply no more than 800 lbs of pulling force to each chain end (1600 lbs total).
13. If needed, adjust the position of the tail shaft (only if the chain cannot be assembled otherwise) to gain extra slack. Ensure the tail shaft remains square to the sorter frame. See Figure 26 and Figure 27 in Appendix 3.
14. Once the chain installation is complete, reinstall the “missing bearing” sensor on the first divert of the sorter.
    a. See Figure 22, Figure 23, and Figure 24 in Appendix 3 for drawings showing the mounting details, location, and alignment of the pin sensor and “missing bearing” sensor.
    b. The “missing bearing” sensor must be positioned 4-1/2” behind the pin sensor.
    c. See Section 6.2 for detailed troubleshooting information on the “missing bearing” sensor.

5.1.6 Slat Installation

1. Before starting the slat installation:
    a. Remove all the tags on the chain identifying matched pairs.
    b. Double check all the chain splices to verify the cotter pins are in place and fully bent.
2. After the chain is completely installed with slats spaced approximately every two feet, proceed with the installation of the remainder of the slats. See Figure 9.
3. Slide retention levers onto the bosses on each chain mount. The smooth side of the lever faces outward. (If installed backwards, the lever will not rotate on the boss.) The levers will only slide on and off the boss when oriented vertically.
4. Lay a slat into place. The four pins on the slat rest in the two half-round recesses on each chain mount.
5. Ensure the proper orientation and position of the shoe. See Figure 9 and note that the flow arrow must be oriented in the direction of flow.

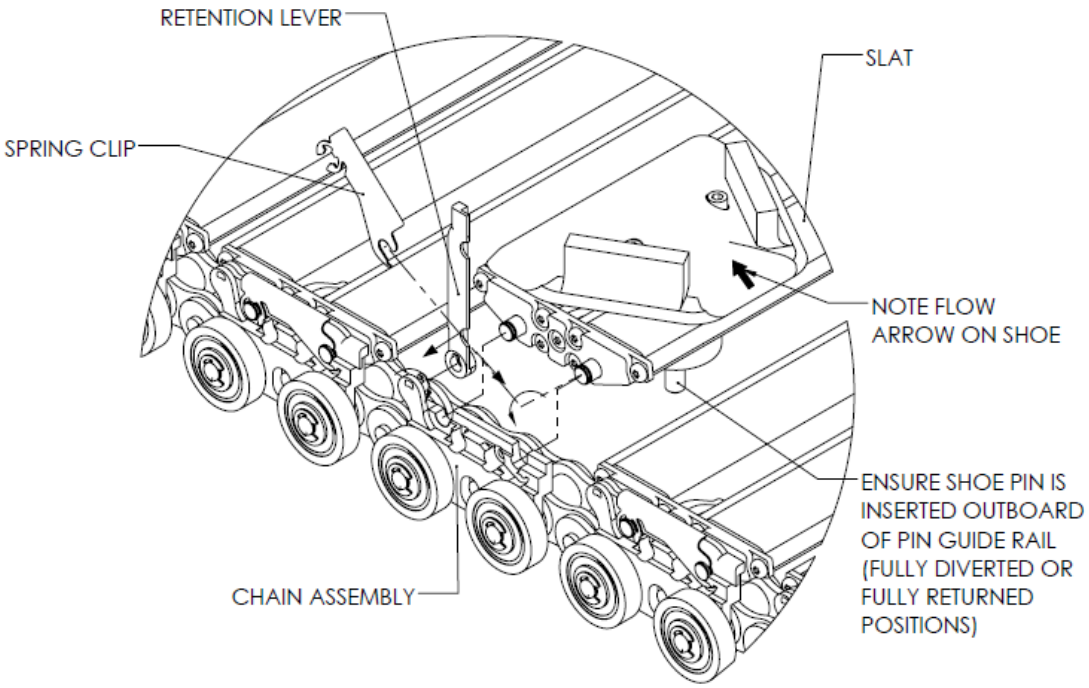

Figure 9-Slat Installation Detail

Ensure the shoe is in either the fully diverted or fully returned position. Failure to do so may cause mechanical damage to the sorter.

6. Rotate the lever on each side of the slat to close over the two chain pins on each side.
7. Slot the open end of a spring clip into the groove in the slat pin farthest from the retention lever, then rotate the spring clip down to snap the “E ring” end of the spring clip into the groove of the other slat pin.
   a. If the spring clip grooves are not fully exposed, it may be necessary to pull the slat towards the chain mount in order to correctly install the clip.

Ensure that all spring clips are fully latched and secure. DO NOT USE any spring clips that are visibly bent or deformed. If the spring clips are not secured properly, the slat may be thrown out of the sorter during operation.

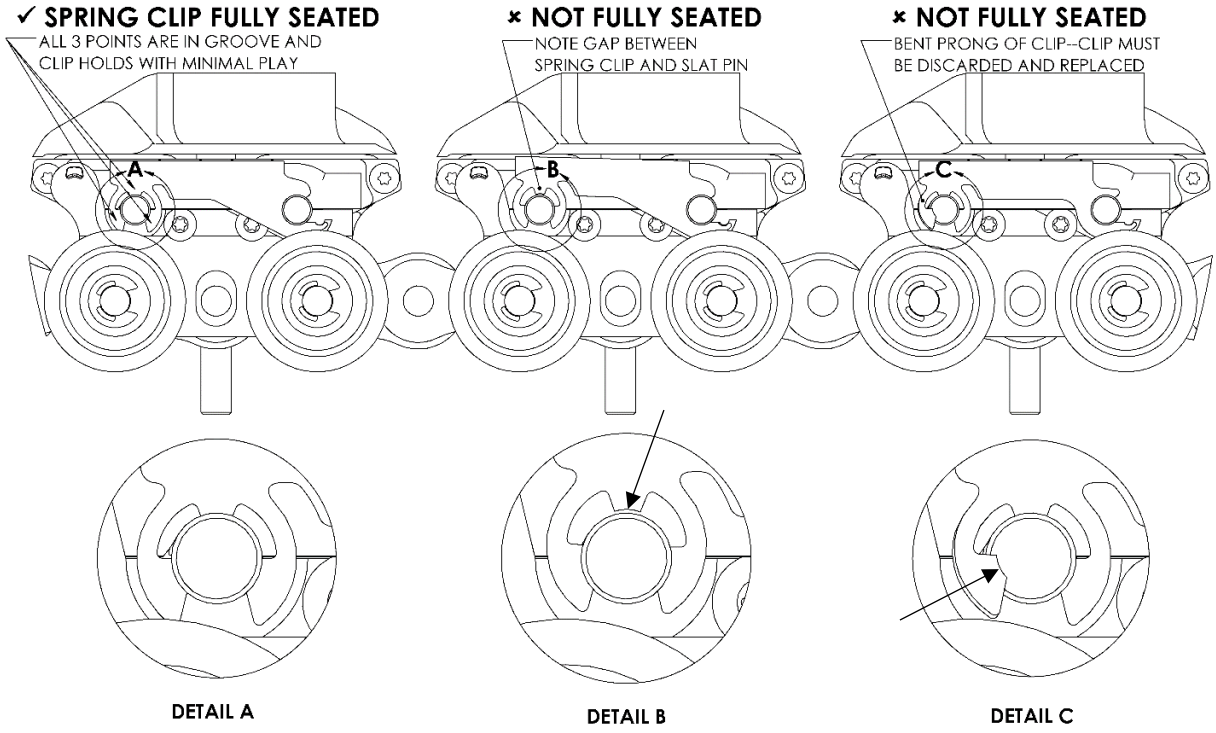

Figure 10-Spring Clip Seating Detail

8. Repeat step 7 on the other side of the slat.
9. After the slat install is complete, inspect all spring clips to ensure they are latched correctly. See Figure 10.
   a. Careful inspection is required. The differences between fully seated and incorrectly seated spring clips are small and require attentiveness to detect.
   b. If the spring clip will not snap into a fully seated position (if it can be lifted with finger pressure so that a gap is visible between the slat pin and the clip), the clip must be discarded and replaced.
   c. If any portion of the retaining clip appears to be bent or deformed, the clip should be replaced, not reused.

5.1.7 Setting Infeed Conveyor

1. Set the infeed end of the infeed (knife edge) conveyor according to the system layout drawing.
2. Recommended placement is shown in Figure 11.
3. The knife edge ships with the belt fully tensioned and the nosebar in a neutral position. The belt is tensioned by measuring between (2) marks on the belt centerline. The marks are 24” apart when the belt is slack (new) and 25-5/8” apart when the belt is fully tensioned. Ensure the marks are present before adjusting the nosebar or changing the belt tension.

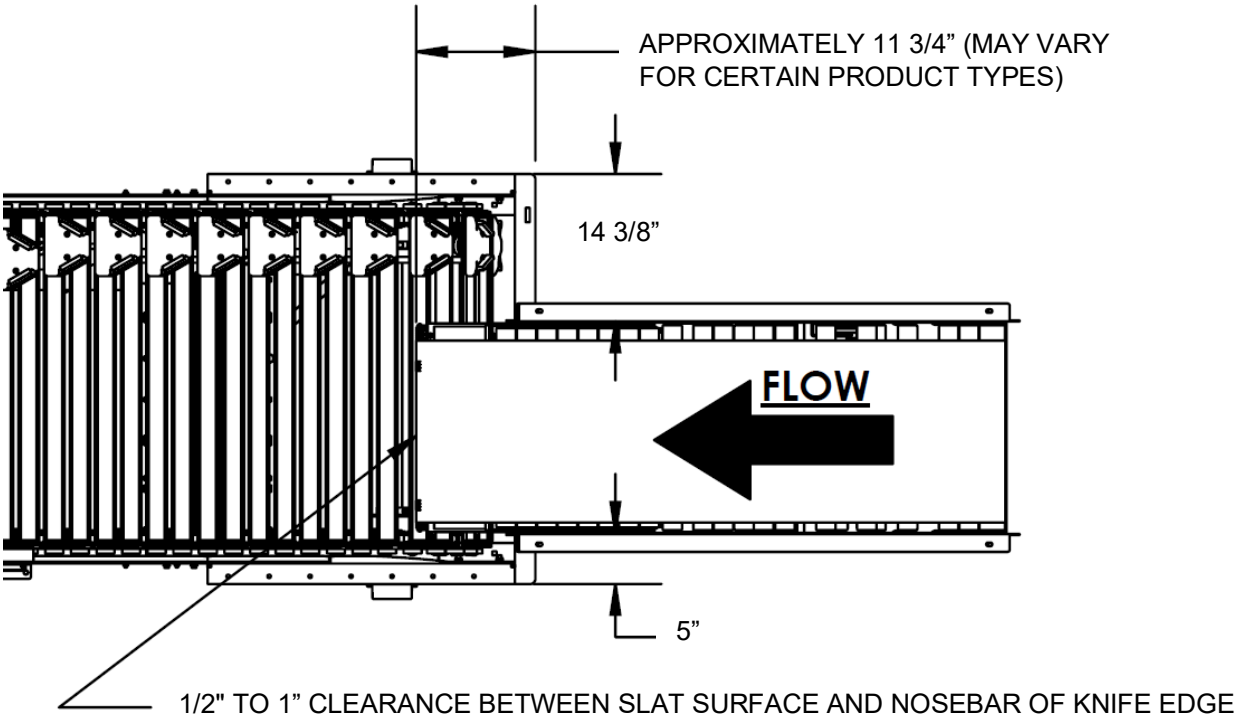

Figure 11-Knife Edge Installation Positioning

4. Adjust the nosebar horizontal and vertical position to match the position shown in Figure 12.
   a. See Figure 13 for adjustment locations. The knife edge nosebar horizontal adjustment is indicated by note flag 3 and the vertical adjustment is indicated by note flag 4
5. Adjust the knife edge as close to the slats as possible without touching (1/2" to 1" clearance recommended, product specific)
   a. Note that the spacing between the knife edge and the slat surface must be measured with the slat at its closest approach, which will be when the outside edge of the slat is lined up with the knife edge bearing. See Figure 12 for details.
   b. In general, heavier product will require a larger spacing to ensure there is no contact between the slats and the knife edge belt during operation.
   c. Small or top heavy product will require a smaller spacing to ensure the transfer is smooth and proper positioning on the sorter surface is maintained.
6. Ensure that both sides of the nosebar are supported equally, or the nosebar can twist when heavy product passes over it.
7. Verify by manually advancing the slats to ensure there is no contact between the slats and the knife edge belt.

When adjusting the knife edge nosebar outward, relax the belt tension first. Do not exceed the maximum allowable knife edge belt stretch of 25-7/8" between marks during the adjustment process.

8. After adjusting the nosebar, retension the knife edge belt to the correct running tension (until the measurement between the marks reads 25-5/8”).
   a. See Figure 13 for location of the tensioner. The belt tensioner is indicated by note flag 5

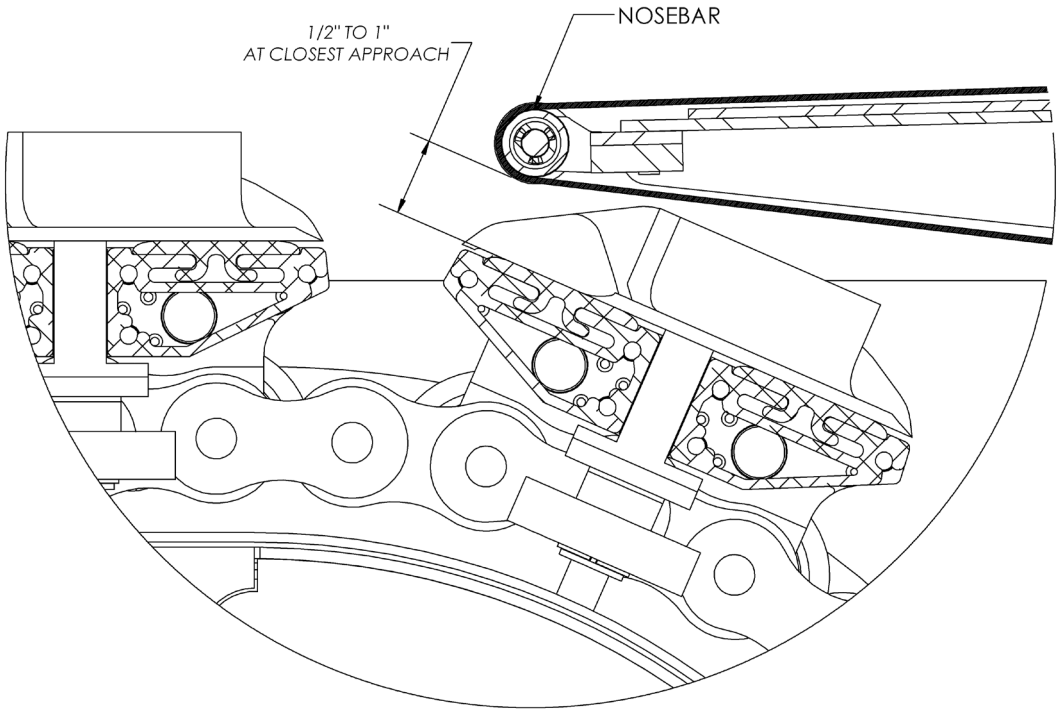

Figure 12-Knife Edge Nosebar Positioning Detail

9. Verify the belt tracking by turning on and running the knife edge. Adjust the snub rollers as needed for stable tracking.
   a. See Figure 13 for a view of the knife edge conveyor. The snub rollers are indicated by note flag 7
   b. See Figure 34 and Figure 35 in Appendix 3 for additional drawings of the knife edge conveyor.

Conveyor belt tracking should only be performed by trained personnel who understand the hazards of the conveyor in operation.

Ensure that the E-stop for the AC motor is operational prior to running the conveyor. The E-stop may be required to quickly disconnect power to the AC motor to preserve the life of the belt for tracking purposes.

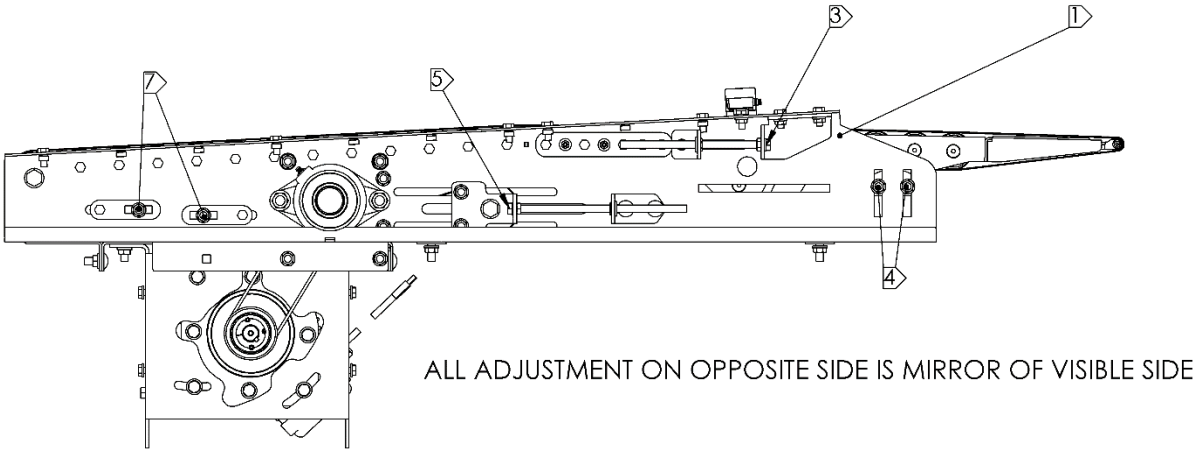

Figure 13-Side View of Knife Edge Conveyor

10. The snub rollers are used to adjust tracking of the AC belt. Run the conveyor briefly and see which direction the belt is tracking towards.
11. If the belt is tracking towards the right, move the left side of the snub roller forward. If the belt is tracking towards the left, move the right side of the snub roller forward.

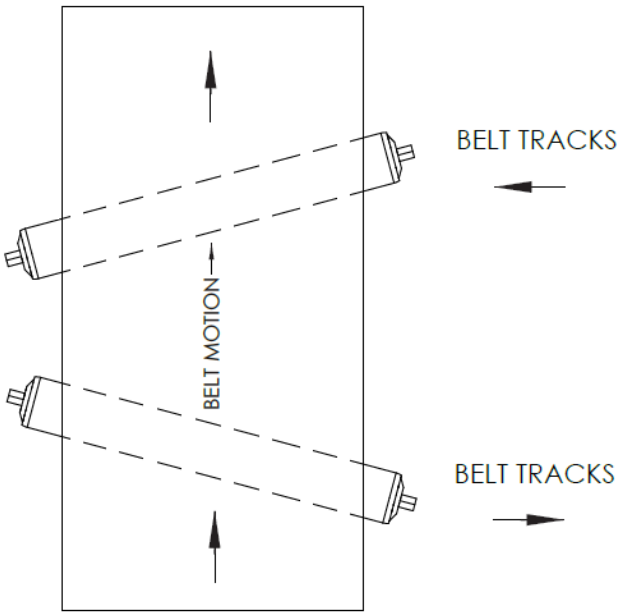

Figure 14-Belt Tracking by Adjusting Snub Rollers

When initially tracking the belt, ensure that the belt does not ride on a side frame or contact the timing belt from the motor as the snub roller is adjusted to track the belt. This can damage the belt.

12. If the belt is still not tracking, adjust the snub rollers along the conveyor frame that are close to the portion that is tracking improperly.

13. When the belt runs twice its length without changing positions and without requiring additional adjustments, then the belt is tracked properly.
14. If improper tracking of the belt persists, contact your BSC representative for technical assistance.

NOTE

The nosebar must be set square to the knife edge frame in both horizontal and vertical directions. The nosebar position has a large influence on proper belt tracking. If the belt tracking is not responding to snub roller adjustment, a small change in nosebar position is usually needed. See step 4 in this section for details on adjusting the nosebar.

5.1.8 Setting Discharge Conveyor

1. See the system layout drawing for the discharge conveyor location.
2. Adjust the discharge transition assembly as close to the slats as possible without touching (1/2” to 1" clearance recommended, product specific). The discharge transition assembly rollers should be set approximately 1/8” lower than the conveying surface of the sorter. See Figure 15.

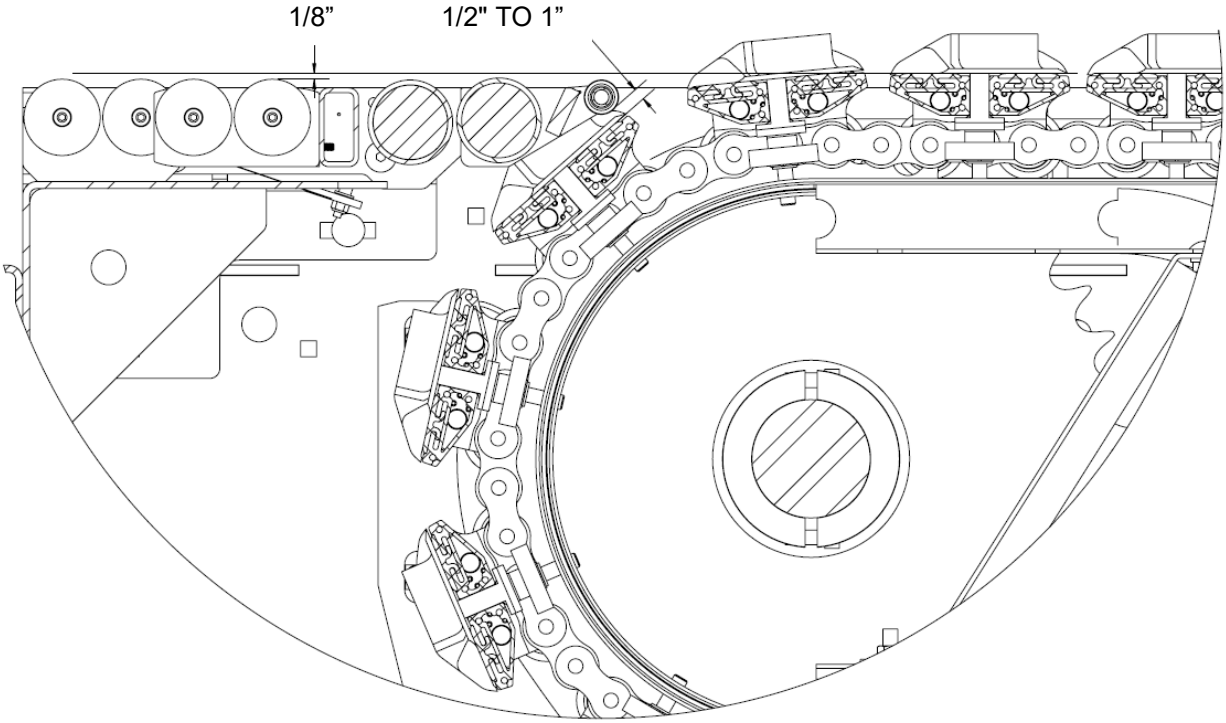

Figure 15-Discharge Transition Assembly Positioning Detail

3. Verify the correct positioning of the discharge transition assembly by manually advancing the slats to ensure there is no contact between the slats and the discharge assembly nosebar.
4. Verify that the discharge assembly prox is ON when the discharge assembly is in its rest position, and OFF when the assembly is retracted in the flow direction.

5.1.9 Installing Debris Sensors

There are two types of debris sensors; an internal sensor and an underside sensor. Both sensors have a swinging metal gate which does not contact any part of the sorter in normal operation. In the event of debris or a dislodged slat, the debris will hit the gate and cause it to fall over, unblocking a prox sensor and signaling the PLC to shut down the sorter. After clearing the debris, the gate must be manually reset to its default position before the sorter will restart.

1. See Figure 33 in Appendix 3 for drawings showing a typical installation of debris sensor gates.
2. Check the system layout drawing for installed locations of internal and underside sensor gates.
   a. Typical locations for underside sensors are (2) per sorter, located approximately 20 feet downstream of the sorter tail, and located immediately upstream of the catenary.
      i. The underside sensor downstream of the tail may be moved depending on the required stopping distance of the sorter in question. Ideally, if this sensor trips, the sorter is able to come to a stop before the debris enters the tail section.
   b. Typical locations for internal sensors are in intermediate beds between diverts, approximately (1) per 50 feet of sorter, as evenly spaced as practical.
3. Internal sensors (balloon (1) in Figure 33) are typically installed in the bed sections as shipped from the factory. If they need to be installed or moved, they are mounted to the top side of the lower sideframe, with the arrow in the direction of product flow.
4. Underside sensors (balloon (2) in Figure 33) are installed as part of the sorter installation. They hang underneath the bottom side of the lower sideframe, with the arrow in the direction of product flow.
5. Once the sensor gate is installed, verify that the gate moves freely through its entire range of motion without hitting any internal sorter parts.
   a. To provide clearance for the gates to swing, internal sensors may only be installed in intermediate sections, between bed spacers. Underside sensors are generally less restricted and may be installed wherever there are no floor supports.

NOTE

If the sorter is to receive underside guarding, install or lay out the underside guarding before installing the underside sensors to ensure the sensor install location is not blocking the guarding in that area. Reference the system layout drawings for sensor locations.

6. Verify that the prox sensor detects the gate when it is in its “set” state, and turns off when the gate is tripped. (The prox sensor should be set 0.08” +/- 0.04” away from the tab on the gate.)

5.1.10 Installing Guards and Guiderail

1. See Figure 16.
2. The chain guards mount inside the top rail of the sorter frame.
3. Guiderail (if ordered) mounts outside the top rail of the sorter frame, and shares mounting bolts with the chain guards.
   a. To install the guiderail, loosen the bolts securing the chain guards.
   b. Slide the guiderail section in between the heads of the chain guard bolts and outside of the sorter sideframe.
   c. Do not place the guiderail between the chain guard and the sorter sideframe, as it will put the chain guard too close to the slats.
   d. Tighten the chain guard bolts, and join the guiderail sections together with the additional bolts provided with the guiderail.
      i. Tighten 1/4”-20 fasteners to 8.4 ft-lb.

NOTE

The spur mounting brackets also share their mounting bolts with the chain guards (only applicable to divert sections which have spurs mounted).

5.1.11 Installing Side Covers

1. See Figure 16.
2. The side covers mount to (2) lower cover brackets, fastened to the underside of the sorter frame lower rail, and (2) upper cover brackets, fastened to the underside of the sorter frame upper rail.
3. The cover brackets and covers have multiple mounting holes for flexibility in positioning.
4. Insert the tabs of the lower mounting brackets in the slots on the bottom of the cover panel, insert the screws of the upper brackets through the keyhole notches in the cover panel, and tighten the screws.
   a. Tighten #10-32 SHCS for side covers to approximately 24 in-lb (just tight enough to ensure a tool is needed for removal). Overtightening may cause the slots in the plastic covers to deform over repeated use and become difficult to remove.

WARNING

All side covers and guards must be in place during sorter operation.

5. BSC recommends running an E-stop pull cable along the length of the sorter on both sides, such that the cable must be disconnected in order to remove the covers. It is possible to preserve ease of maintenance with this arrangement by using a carabiner or other quick latch on the E-stop cable. This arrangement provides an additional safeguard, to ensure covers are not removed while the sorter is operating.

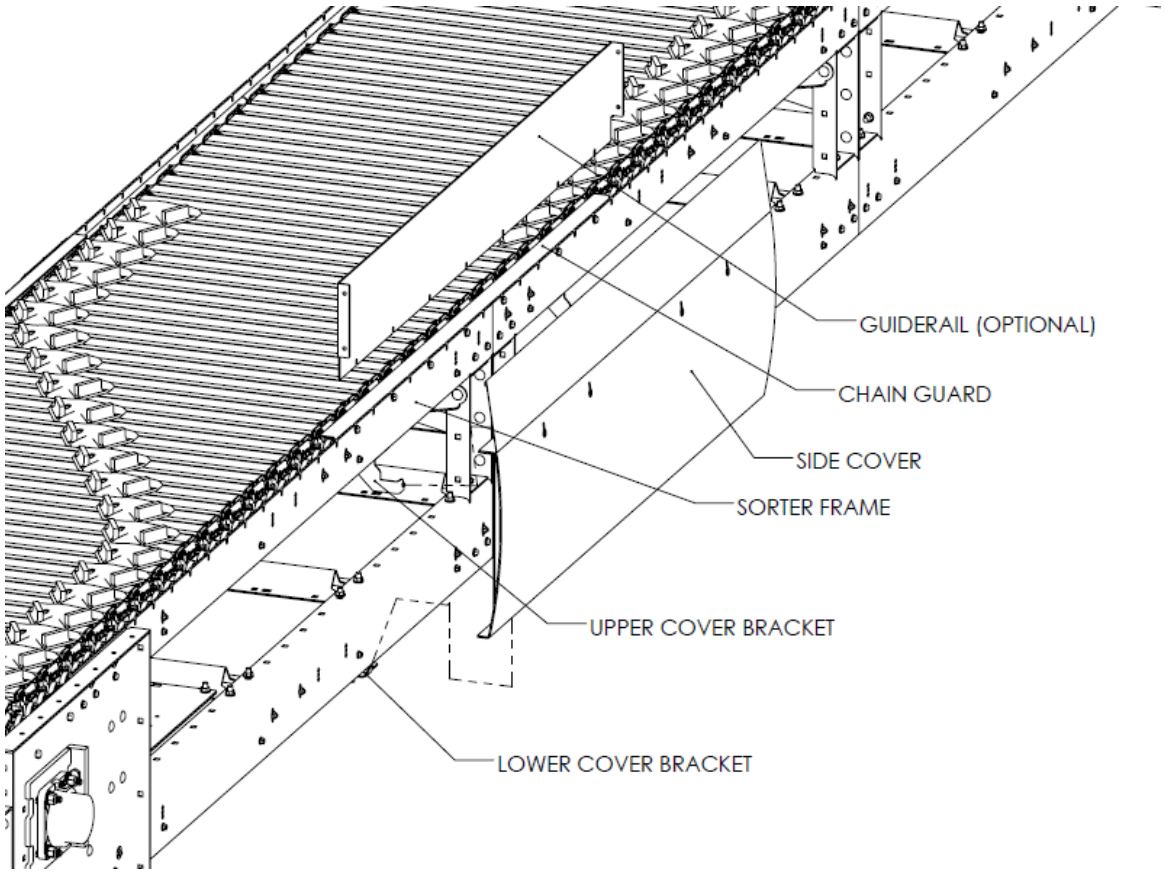

Figure 16-Chain Guard, Guiderail, and Side Cover Installation

5.1.12 Setting Oiler Flow

While the sorter can run for a short period of time and at slow speeds without oiling, the oiling system should be fully operational prior to any prolonged runs at operating speed (maximum total runtime equal to the duration of 1 oiler cycle). Failure to oil the chain at the intervals specified in Table 7 in Appendix 2 will cause the chain to wear rapidly and shorten its lifespan.

It is important to set the correct oil flow rate per the procedure provided in this section. If the oil flow rate is too low, the chain will have a shortened lifespan. If the oil flow rate is too high, excess oil will be deposited on the slats and product.

1. The chain oiler assembly consists of a pump and metering unit mounted to a panel, and two oil lines to brushes that dispense oil to each chain.
   a. The pump and valve unit is usually mounted on the drive section, opposite the drive motor, but may be mounted remotely when the standard mounting location is difficult to access for refilling.
   b. The two oil brushes are always mounted at the infeed end of the catenary section, directly above the return (lower) chain path as it exits the catenary.
   c. See Figure 28 and Figure 29 in Appendix 3 for details of the oil brush mounting.

   d. See Figure 17 for a detail of the oiler pump and metering unit.
2. Fill the oiler with oil to the “MAX” level marked on the reservoir.
   a. Fill with SAE 30 mineral oil or SAE 85W gear oil (ISO 100), for operation between 40°F and 100°F. Consult BSC for operation at temperatures outside these limits.
3. With the sorter off and the drive motor locked out, disconnect the oiler feed tubes from the oil brushes, close both dispensing valves fully, and open the return valve fully.
4. Apply 24VDC power to the oiler motor. See the Bijur Delimon SureFire II Lubricator Quick Start Manual for a wiring diagram (the wiring diagram is also printed on the inside cover of the oiler pump).
   a. Depending on the Controls interface, this may require wiring 24VDC directly to the motor, or it may be possible to command the motor to run continuously by interfacing with the PLC. The motor needs to be running continuously to set the oil flow rates.
5. Slowly close the return valve until the pressure switch activates, then lock down the setting with the set screw on the return valve.
   a. The pressure switch setpoint is nominally 290 PSI. Set the return valve to produce approximately 320 PSI on the pump pressure gauge.
6. Put the end of one of the two feed tubes in a container to catch any excess oil, then open the corresponding metering valve slowly. Let the pump run until oil comes out (purging the tube of air).
7. Measure the flow rate by filling a small container of known volume and timing how long it takes.
   a. Use a container that will take at least one full minute to fill at the specified flow rate, which for most sorters will be in the range of 30-60 ml (1.0-2.0 fl oz).
   b. A container with accurate volumetric markings (e.g. a graduated cylinder) is preferred, but the adjustment process can be carried out with any container of the correct size capable of holding oil if the volume of the container is known accurately.
   c. Ensure the container is clean to avoid contaminating the oil. If the oil is contaminated with dirt or debris, do not put it back in the oil reservoir.
8. Adjust the metering valve to set the flow rate according to Table 8 in Appendix 2 for an initial flow setting (adjust as needed during operation to provide adequate lubrication).
9. Repeat the measuring and adjustment process in steps 7 and 8 until the measured flow rate is within 10% of the specified value.
10. Mark the valve setting and close the metering valve fully.
11. Repeat steps 6 through 10 for the second oiler feed tube and metering valve.
12. Remove 24VDC power from the oil pump. If any wiring was changed to force the pump to run continuously, replace the original wiring at this time.
13. Open both metering valves to their marked settings and lock them down with the set screws on each valve.

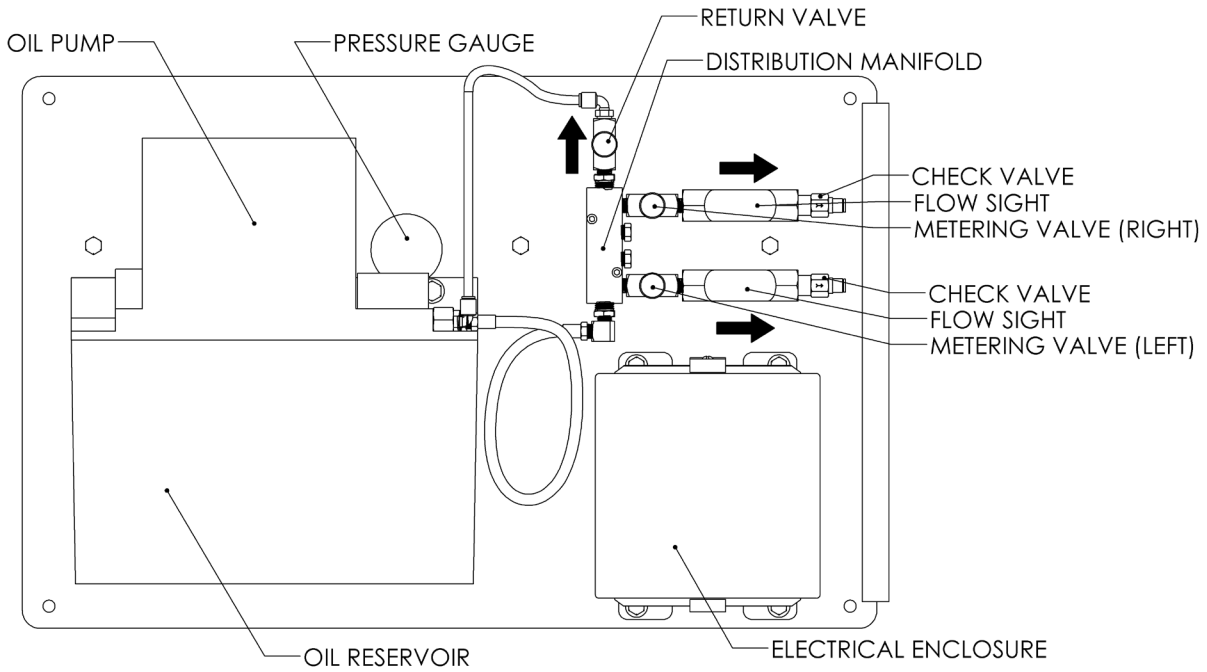

Figure 17-Oiler Pump and Flow Adjustment Panel

14. Reconnect the tubes to the oil brushes.
15. With the sorter running at operating speed, use the manual button (depending on the electrical and Controls interface) to run the oiler for one full chain revolution. Make sure the oiler pressure does not drop below the setpoint of the pressure switch (290 PSI) and verify that the pressure switch is activated when the oiler runs.
16. Reference Table 7 in Appendix 2 for recommended oiler running intervals and duration. The system PLC should be programmed to run oil cycles at the specified intervals and durations based on actual sorter runtime.
17. Stop the sorter and lock out the drive.
18. Inspect the chain and make sure oil is flowing to both brushes.

NOTE

The sorter chain is shipped with grease applied to protect it from corrosion during storage and shipping. When the oiling system is first run, the oil will begin washing the grease off the chain. It is normal for a new sorter to discharge some oil and grease (typically deposited at the drive and tail). This discharge will reduce in volume once the grease has been washed off the chain (typically 10-20 oiler cycles with normal operation).

5.1.13 Tailshaft Encoder Installation

A 10,000 line HTL-type encoder is shipped with the tail section of the sorter, but is not shipped installed to protect it from damage during transport. This encoder is intended to be connected directly to the knife edge to allow it to match sorter speed. Both sides of the tailshaft are designed to accept a standard 3/8” hollow bore encoder, so a second encoder may also be added for sorter control if desired.

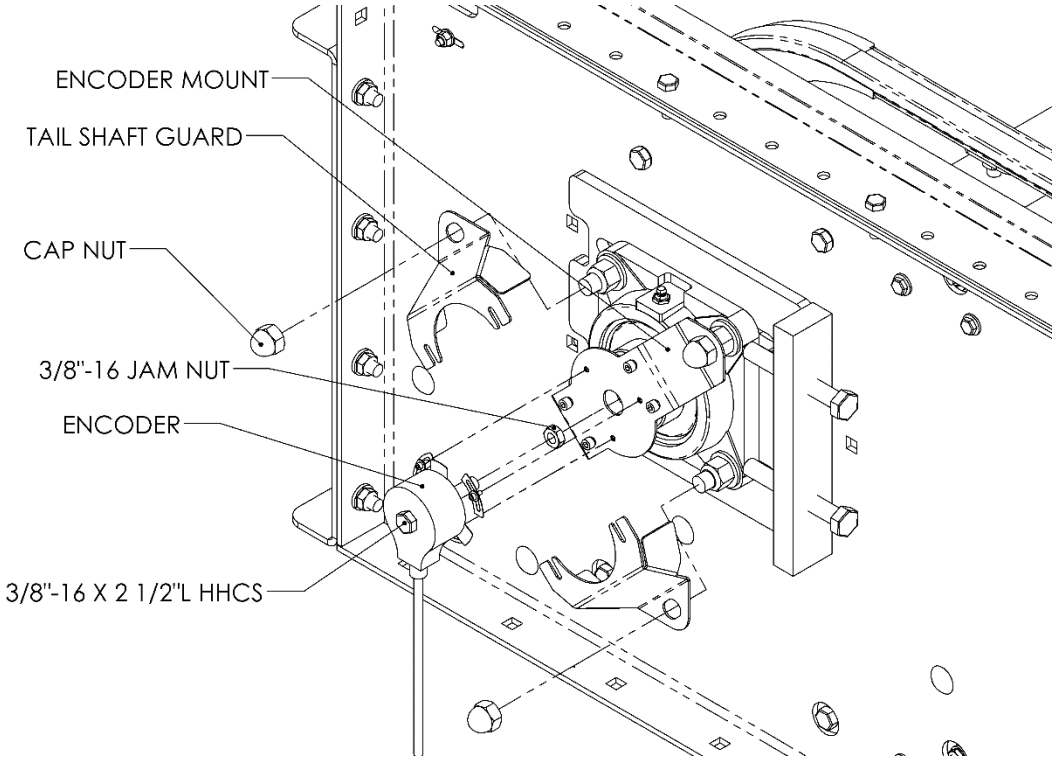

Figure 18-Tailshaft Encoder Installation

1. For purposes of controlling the knife edge and/or any optional gapper conveyors, the encoder may be mounted on either the right or left side of the sorter with no change in functionality or install/wiring procedures. Reference Figure 18 for mounting details.
2. With the sorter stopped and locked out, remove the tail shaft guards. Do not remove the encoder mount from the sorter.
3. Insert a 3/8”-16 x 2 1/2”L bolt through the encoder until the head is contacting the outer face of the encoder body. The stator coupling on the encoder should be facing opposite the head of the bolt.
4. Tighten the Torx screw on the encoder clamping ring, per the manufacturer’s instruction sheet packaged with the encoder.
5. Install a 3/8”-16 jam nut onto the bolt. Do not tighten the jam nut against the face of the encoder.
6. Thread the bolt into the tapped hole in the sorter’s tail shaft until the encoder’s stator coupling just contacts the encoder mount. Do not compress the stator coupling.
7. Tighten the jam nut against the face of the tail shaft to prevent the encoder bolt from vibrating loose. The jam nut should not be in contact with the clamping ring on the encoder.
8. Install (3) M3 screws to secure the stator coupling of the encoder to the encoder mount.
9. Reinstall the tail shaft guards.

10. Verify the tail shaft can turn freely with no rubbing on the encoder mount or guards.
11. See section 5.2.5 for electrical wiring details of the encoder.

5.1.14 Initial Startup Procedure

1. Inspect inside the sorter for tools or debris. Special consideration should be given to checking the cross members, which are prone to collecting items.
2. Temporarily mark one slat near the drive section (e.g. with masking tape)
3. Advance the chain by hand in the forward operating direction for one full revolution (until the marked slat comes around to the same position) to ensure there is no binding or other mechanical problems
   a. See Section 5.1.5, steps 4 and 7, for details on advancing the chain by hand.
4. Apply power to the drive motor at low speed (e.g. 5Hz). Ensure correct direction of rotation.

Running the sorter backwards can cause damage to slats and divert mechanisms. Never allow the chain to advance backwards, even when advancing by hand.

5. Allow the chain to advance for one full revolution (until the marked slat comes around to the same position) at slow speed before increasing speed.
6. Monitor the current draw on the VFD during slow speed operation. Ensure the current is not exceeding the nameplate limit of the motor.
   a. If the current draw is abnormal, contact your BSC project manager or BSC customer service for troubleshooting instructions.

5.2 Electrical Installation

See Figure 37 through Figure 43 in Appendix 4 for electrical drawings of the divert control box.

5.2.1 Drive Motor Settings

1. VFD settings and limits specific to each individual sorter will be provided as part of the engineering process, if applicable. Contact BSC for details.

VFD settings should only be adjusted by qualified personnel. Improper VFD settings can prevent correct emergency stop operation or cause hazardous unintended motion, and can cause damage to the drive motor or sorter mechanical system.

2. Observe the motion of the sorter chain and slats immediately upstream of the drive sprocket: if the slats are moving closer together during deceleration, deceleration rate should be reduced.

Setting the deceleration rate too high can cause the chain to jump the drive or tail sprockets or cause slats to become damaged during deceleration. During initial commissioning, monitor chain behavior at the drive and tail during a deceleration from full speed (include a full product load if possible) and ensure that the chain is not climbing out of the sprockets. (If slats are visibly moving closer together at the drive during deceleration, the rate is too high and must be reduced.)

3. Some sorters (typically motors 30HP and greater) will need limits on torque and acceleration during startup, to prevent a momentary overload of the chain.

   a. As a general rule, startup current should be limited to no more than 120% of a motor's rated full-load current for a motor 30HP or larger. Exact limits will vary depending on the sorter configuration. Contact BSC for details.
4. As a starting point, most typical sorters over 200'L need a ramp time in the range of 5-10 seconds at a running speed of 350 FPM (15 to 30 feet stopping distance), and a ramp time in the range of 9-18 seconds at a running speed of 600 FPM (45 to 90 feet stopping distance). Longer sorters, and sorters with heavy product load, will require slower acceleration and deceleration than shorter or lightly-loaded sorters.
   a. It is desirable to set the E-stop deceleration as fast as possible within the above specified constraints, because in the event of a crash or other emergency, this will reduce the number of slats that are affected and bring the equipment to a safe halt as fast as possible. BSC recommends gradually increasing deceleration until the first signs of slats moving closer together are observed, then backing down to a safe value.

Do not set the VFD to "coast" mode on deceleration or E-stop, and do not remove power from the VFD while the sorter is moving. Most gear ratios available for shoe sorters will strongly resist back driving through the gearbox, and the result will be a violent stop that can cause the chain to skip teeth on the drive sprocket.

5. Once the VFD has been set appropriately, ensure that any maintenance or slow-speed "jog" modes of operation have the same acceleration and deceleration controls, to prevent damage to the sorter during maintenance operations.

5.2.2 Components requiring 3 phase AC power connections

1. The main drive motor is an AC induction gearmotor requiring VFD control (VFD not supplied by BSC). Motors range between 5-40HP; contact BSC or see system specifications for the HP requirements for an individual sorter.
2. Each divert control box contains an internal 48VDC, 20A output power supply. Typical input for each power supply is 460VAC 3 phase, 1.4A full load steady state.
3. The knife edge induction conveyor is an AC servo motor requiring 230V single or 3 phase input. The servo motor is internally controlled so an external VFD is not required.
   a. A 460V to 230V transformer may be supplied with the equipment, depending on the system electrical layout and available voltages. Other options may be available; contact BSC for details.

Always check motor nameplate information and wiring diagrams for the correct voltage and phase information before applying power! Connecting a motor to the wrong voltage will damage it, and can present electrical and fire hazards.

5.2.3 Components requiring 24VDC power connections

1. Each divert control box, including the processor and all I/O (motors and sensors), requires approximately 0.75A at 24VDC.
   a. Minimum voltage is 20.4VDC at the divert box (may require larger wiring gauge to keep the voltage drop under control for long runs). Correct PLC operation is not guaranteed below the minimum voltage.
   b. Note the PLC inside the divert box has a maximum voltage of 26.4VDC.
   c. Depending on the number of divert boxes, may require a supplemental 24V power supply to ensure voltage is kept within the allowable range for cable runs exceeding 200 feet
2. The oiler motor requires 2.4A at 24VDC
   a. The oiler does not have any internal relays so the motor will need to be controlled by a relay (not provided by BSC). Wiring the motor directly to 24VDC will cause it to run continuously which is not correct operation.
3. The discharge transition MDR requires 2.1A at 24VDC
   a. The MDR card is “live roller” operation only.
   b. Reference the Pulse Roller – EZ24 Users Guide for MDR speed settings
   c. Recommend setting the discharge MDR slightly faster than sorter max run speed.
4. All sensors (listed in Table 2) require 24VDC power.

5.2.4 Components requiring 48VDC power connections

1. Each divert box contains a 48V, 20A power supply capable of running up to 4 divert switches.
2. Max recommended wire run is 60 feet between any switch and its divert box. The provided Molex Mini-Fit patch cables are 10 feet long, so a maximum of 6 cables may be connected in series.

5.2.5 Knife Edge control wiring for encoder following

1. In a typical configuration, the knife edge conveyor will not be directly speed-controlled by the PLC, but will “follow” the speed of the shoe sorter by using a signal from the provided 10,000 line HTL incremental encoder mounted on the sorter tailshaft. This ensures the knife edge belt will always match speed with the sorter, as long as the motor is powered and enabled.
2. It is also possible to use the same encoder signal to drive gapper conveyors at a fixed ratio to the sorter speed (“blow-through” configuration). The speed ratio is adjustable by changing motor parameters within the ClearPath MSP motor software. See the Teknic AC ClearPath-MC/SD User Manual for detailed instructions. (The motors will ship configured for the system-requested speed ratios.)
3. The encoder requires a connection to 24V logic power (RED wire) and 0V/ground (BLU wire and shield braid). The encoder’s “A” pulse signal connects to each ClearPath-AC motor (WHT wire on the encoder) and all other wires are left unconnected. See Table 1 for wiring details.

NOTE

The encoder comes with a manufacturer-supplied pamphlet which has wiring information, and this should be cross-checked to verify the wire colors are correct.

Table 1-Wiring of Knife Edge and AC Gapper IO Cable

TEKNIC IO CABLE PIN	WIRE COLOR	DESCRIPTION	CONNECT TO
HLFB+	GRN	Error signal power	+24V logic power (or daisy chain from previous HLFB-)
INPUT B+	BLK	Pulse signal (200 pulses per inch of sorter travel)	"A" signal on 10,000 line HTL encoder (WHT wire on encoder). Multiple motors may be tied to the same signal.
INPUT A+	WHT	Direction of rotation	0V (center drive knife edge)
			+24V logic power (end drive ClearPath-AC gappers)
ENABLE+	BLU	Enable signal	PLC output (typ. 1 for all ClearPath-AC motors in gapper stack)
HLFB-	RED	Error signal (Servo On)	PLC input (dry contact signal, may be daisy chained)
INPUT B-	YEL	Ground for Input B	0V
INPUT A-	BRN	Ground for Input A	0V
ENABLE-	ORN	Ground for Enable	0V

4. In operation, the knife edge will only move if it has power and if the Enable signal is high. If it is powered and enabled, the knife edge belt will move a distance of 1/200 inch per each encoder pulse to remain in sync with the sorter slats.
   a. Servo gapper belts will operate identically but may be specified with a speed ratio, such that the belt will move less than 1/200 inch per each encoder pulse. See the applicable system design documentation for the intended speed ratios for each gapper.

The ClearPath-AC motors only receive a single pulse signal from the encoder, so the motor will spin in the same direction regardless of the direction the encoder is rotating. (Motor rotation is set with Input A.) If the encoder is not well-secured mechanically, movement of the encoder body relative to the sorter frame could cause extra pulses to be transmitted and cause the knife edge to run faster than desired.

5. The knife edge or servo gapper conveyors may also be controlled with an external high-speed pulse signal if dynamic speed changes are desired. Contact BSC for details.

The ClearPath-AC “Enable” signal is not a safety-rated stop signal, so AC power must be cut to the knife edge and servo gappers in the event of an E-stop. If AC power is cut to the knife edge while the sorter is still moving, a loss of product tracking will result as the knife edge conveyor will dynamically brake to a stop. Each system will need to be evaluated by qualified personnel to determine whether or not AC power can be safely maintained during the sorter deceleration period in an E-stop scenario.

5.2.6 List of Sensors (discrete)

See the General Arrangement drawings in Appendix 3 for physical locations and mounting of each sensor on the sorter

Table 2-List of Sensors

SENSOR TYPE	LOCATION	STATE IN NORMAL OPERATION	STATE DURING FAULT	TYPE OF FAULT DETECTED	RECOMMENDED FAULT RESPONSE	NOTES
Inductive proximity	Discharge transition assembly	HIGH	LOW	Jam or debris at the discharge assembly; a slat is out of place	Shut down the sorter drive and alert the operator, regardless of the duration of the fault (momentary or sustained)	
Photoelectric (laser retro-reflective)	Catenary (upper)	HIGH	LOW	Catenary sag is too low (warning)	Ignore momentary trips and ignore during startup. Display a warning to the operator for a sustained trip (the operator should schedule a maintenance window to shorten the chain)	See ifm Efector - OGP7xx Retro-reflective Photo-electric Sensor - Operating Instructions for instructions on setting the sensor operating mode and sensitivity
Photoelectric (laser retro-reflective)	Catenary (lower)	HIGH	LOW	Catenary sag is too low (critical); debris or a thrown slat is inside the catenary	Shut down the sorter drive and alert the operator, regardless of the duration of the fault (momentary or sustained)	
Photoelectric (laser retro-reflective)	Tail	HIGH	LOW	Debris or a thrown slat is inside the tail section	Shut down the sorter drive and alert the operator, regardless of the duration of the fault (momentary or sustained)	

SENSOR TYPE	LOCATION	STATE IN NORMAL OPERATION	STATE DURING FAULT	TYPE OF FAULT DETECTED	RECOMMENDED FAULT RESPONSE	NOTES
Inductive proximity	Crash detection gate (internal)	HIGH	LOW	Debris or a thrown slat inside the sorter	Ignore momentary faults. Shut down the sorter drive and alert the operator for a sustained fault. The gate will need to be mechanically reset after a fault.	Multiple gates (typ. 1 per 50 feet), see the system drawing for quantity and location
Inductive proximity	Crash detection gate (underside)	HIGH	LOW	Debris or a thrown slat hanging from the slats underneath the sorter	Ignore momentary faults. Shut down the sorter drive and alert the operator for a sustained fault. The gate will need to be mechanically reset after a fault.	Multiple gates (typ. 2 per sorter), see the system drawing for quantity and location
Photoelectric (retro-reflective)	Induction conveyor	Varies (detects product)	HIGH (contin-uous)	Product jam at the sorter infeed	Hold product upstream of the induction conveyors and alert the operator for a sustained block indicating a jam	Monitored for divert timing as well
Photoelectric (retro-reflective)	Discharge transition	Varies (detects product)	HIGH (contin-uous)	Product jam at the sorter discharge	Shut down the sorter and alert the operator for a sustained block indicating a jam	
Photoelectric (retro-reflective)	Downlane spur	Varies (detects product)	HIGH (contin-uous)	Lane full or a product jam at a sorter downlane	Recirculate packages destined to the downlane. Alert the operator if a jam is indicated.	Supplied by others. Typically 1 per divert

SENSOR TYPE	LOCATION	STATE IN NORMAL OPERATION	STATE DURING FAULT	TYPE OF FAULT DETECTED	RECOMMENDED FAULT RESPONSE	NOTES
HTL incre-mental encoder, 10k lines	Tail	Pulse train propor-tional to com-manded sorter speed	Pulse train is absent or out of sync with the com-manded sorter speed	The sorter drive is not operating, the chain is severed, or a sprocket is derailed	Not typically monitored directly by the system PLC.	Typically used to drive the AC servo on the knife edge induction conveyor.
HTL incre-mental encoder, 20-50 lines (typical)	Tail	Pulse train propor-tional to com-manded sorter speed	Pulse train is absent or out of sync with the com-manded sorter speed	The sorter drive is not operating, the chain is severed, or a sprocket is derailed	If motion is being commanded and the encoder does not respond, shut down the sorter and alert the operator.	Supplied by others (optional). The tail shaft has mounting provisions for a 3/8” hollow shaft encoder
SPST-NO dry contact switch	Oiler (level switch)	CLOSED	OPEN	Oil level is low	Alert the operator to refill the oiler. Run at most 4 consecutive oiler cycles with the low level switch on; on the 5th cycle, shut down the sorter until the reservoir is refilled.	Reference the Bijur Delimon Sure Fire II Lubricator Quick Start Manual and Bijur Delimon Sure Fire II Operators Manual for detailed wiring instructions and wiring diagrams
SPST-NO dry contact switch	Oiler (pressure switch)	CLOSED (when running); OPEN otherwise	OPEN	The oil hose is disconnected, the pump is not running, the flow rate is set incorrectly	Shut down the oiler pump and alert the operator if the pressure switch is not detected 5 seconds after the pump starts. Shut down the sorter after 2 consecutive skipped oiler cycles to prevent damage from lack of lubrication.	

SENSOR TYPE	LOCATION	STATE IN NORMAL OPERATION	STATE DURING FAULT	TYPE OF FAULT DETECTED	RECOMMENDED FAULT RESPONSE	NOTES
SPST-NO dry contact switch	Oiler (manual pushbutton)	CLOSED when pressed, OPEN otherwise	N/A	Manual override to trigger an additional oiler cycle	Run a single oiler cycle and reset the cycle timer when the button is pressed. Resume normal operation after running the extra cycle.	

5.2.7 Communication between system PLC and divert control box

1. See Table 3 for a list of input and output signals that need to be passed between the divert box and the system PLC.
2. A jumper is present on input IN 8 (Bearing Detect). IN 8 is also connected to the signal of the “missing bearing” fork sensor if it is installed.
   a. By default, this jumper is factory installed on every divert box, to pull IN 8 to the HIGH state (disabling the “missing bearing” detection functionality for that divert box).
   b. Remove the installed jumper on the first divert box only to enable the “missing bearing” sensor (requires the “missing bearing” fork sensor to be connected to the divert box).
   c. If IN 8 is ever in the LOW state while the Divert #1 pin sensor is HIGH (indicating that a bearing is missing), the divert box will send a “missing bearing” fault by setting OUT 1 HIGH.
   d. The system PLC should stop the sorter and throw a fault to the HMI on receiving a “Missing Bearing Fault” signal. Divert boxes do not change their operating mode or stop diverting when a “Missing Bearing Fault” is set.
   e. The “missing bearing” fork sensor must be installed on the same physical divert that is wired to Divert #1, because the monitoring functionality also uses the Divert #1 pin sensor.
3. The “Reset All Faults” input is used both as a reset signal and as a “heartbeat” signal to let the divert box know when the sorter is running.
   a. The divert box is expecting a 250ms HIGH, then 250ms LOW, continuous pulse only when the sorter main drive is running.
   b. The divert box only sets faults and monitors bearing sensors when it is receiving a pulse signal.

NOTE Lack of the pulse signal on the “Reset All Faults” input will cause all diverts to become inoperative.

   c. Hold the “Reset all Faults” signal continuously HIGH (connected to the system start button) to reset all faults. The divert box requires a 1 second minimum pulse to trigger the fault reset. All faults latch and will only be cleared by triggering the fault reset.

NOTE Removing power from the divert box will NOT clear faults.

Table 3-Divert Box I/O Mapping

INPUT OR OUTPUT	DESCRIPTION	DIVERT BOX PLC PIN
INPUT	Bearing Detect (internal jumper)	IN 8
	Reset All Faults	IN 9
	Divert #1 CMD (Fire signal)	IN 10
	Divert #2 CMD (Fire signal)	IN 11
	Divert #3 CMD (Fire signal)	IN 12
	Divert #4 CMD (Fire signal)	IN 13
OUTPUT	Missing Bearing Fault (Sensor Fault)	OUT 1

INPUT OR OUTPUT	DESCRIPTION	DIVERT BOX PLC PIN
	Divert #1 Status (Divert Fault)	OUT 6
	Divert #2 Status (Divert Fault)	OUT 7
	Divert #3 Status (Divert Fault)	OUT 8
	Divert #4 Status (Divert Fault)	OUT 9

4. On receiving the “Divert CMD” HIGH, the divert box will wait for the next pin to pass its internal fork sensor, then will actuate the divert. (If the sorter is not running, the divert will not actuate, as the divert box requires both the fork sensor to be blocked and for the “heartbeat” signal to be active.)
   a. Hold the “Divert CMD” HIGH to divert as many shoes as required. When the “Divert CMD” is dropped to LOW, the divert box will wait for the next pin to pass the sensor, then drop the divert.

NOTE

The divert will actuate as soon as the next pin has passed the sensor, and the actuation will be complete before that pin has reached the divert gate. As a result, there are no additional shoes that will be diverted after the divert has been commanded to drop.

   b. If the divert is faulted, the divert box will not actuate that divert.
   c. The divert box will also set “Divert Status” HIGH for that divert, to indicate the divert has a fault.

NOTE

A divert that faults while it is actuated will stay continuously diverted and will NOT drop when “Divert CMD” is set LOW.

6 Operation

6.1 Startup Procedure

1. Before startup, inspect the conveying surface for jammed packages, debris, or damage.
2. Infeed and discharge photoeyes must be aligned with the reflectors and must be clear of packages.
3. Ensure all personnel are clear of the sorter and any other associated conveyors, such as the induction and takeaway conveyors.
4. Packages left on the sorter can recirculate (depending on the Controls implementation) as long as the discharge transition is not blocked during startup.
5. Start the sorter by issuing a command through the HMI (details will depend on the HMI implementation).
   a. The Controls implementation should prevent packages from inducting onto the sorter until it has reached operating speed.
   b. Packages on the sorter during startup should not be commanded to divert until the sorter has reached operating speed. Attempting to divert packages at slow speed can cause jams with certain types of product.
   c. Some implementations may have a variable operating speed or multiple operating speed options.
   d. There may also be a “jog mode” which is intended for maintenance and inspections (typically about 30 FPM) and should not be used for diverting products.

e. Sorter operating speed and other settings should generally be changed through the HMI, not directly on the VFD.

VFD settings should only be adjusted by qualified personnel. Improper VFD settings can prevent correct emergency stop operation or cause hazardous unintended motion, and can cause damage to the drive motor or sorter mechanical system.

6.2 Troubleshooting Faults

Always determine and correct the cause of a fault before restarting the machine. In the case of a component failure, ensure all missing pieces are located and any debris is removed from the inside of the sorter before restarting. Failure to fully correct the fault before continued operation can cause damage to the sorter internal components.

1. Fault troubleshooting details depend on the exact HMI implementation. This section is intended to serve as a general guide for all BSC shoe sorters.
2. Sorter stop—tripped sensor gate (internal or underneath)
   a. If a sensor gate trips, it will require manual reset of the gate mechanism before the sorter can be restarted.
   b. A tripped sensor gate is an indication of debris present inside the sorter, or a damaged or missing slat. Remove any debris prior to restarting the sorter.
3. Catenary photoeye fault (sorter stop)
   a. Only the lower catenary eye will cause a sorter stop. If the lower eye is blocked by the slats in the catenary when the catenary is at rest or in a steady-state running position, the chain must be shortened before operating the sorter to avoid damage to slats and possible derailment of the chain.
   b. The upper catenary eye provides an advance warning so maintenance can be scheduled.
   c. If the catenary eye is not physically blocked, check for dirt on the sensor or reflector, or check for debris that may have blocked it temporarily.
   d. Catenary sag will increase temporarily during sorter startup. If this is causing catenary photoeye faults during sorter start, it may be necessary to reduce the startup acceleration of the sorter drive motor.
4. Tail discharge photoeye fault (sorter stop)
   a. Check for missing slats or debris.
   b. Depending on deceleration settings, a damaged or missing slat would typically end up 10 to 30 feet downstream of the tail section.
   c. Debris or a broken slat may be inside the tail section.
   d. Check the photoeye alignment and clean the sensor and reflector
5. Discharge prox fault (sorter stop)
   a. Check for a missing or damaged slat or shoe.
   b. Depending on deceleration settings, a damaged slat will typically be on the bottom of the sorter, 10 to 30 feet upstream of the drive section.
   c. Check for debris or a package stuck inside the drive section.
   d. Ensure the discharge pushback mechanism has returned to its resting position and still moves freely.
6. “Missing bearing” fault (sorter stop)

a. Check for a missing or damaged slat or shoe.
b. Check for a shoe missing its pin or pin bearing. The slat and shoe may appear normal from the conveying surface side.
c. Inspect inside the sorter for any detached shoe pins or other debris.
d. Depending on deceleration settings, a damaged slat will typically be on the top of the sorter, 10 to 30 feet downstream of the “missing bearing” sensor on the first divert switch.

If a slat with a missing component (shoe pin or bearing) is found, it is critical to locate the missing component(s) and ensure all debris is removed from inside the sorter before restarting. Shoe pins or bearings (or other large solid debris) left inside the sorter can derail the chain and cause damage to multiple slats, chains, and/or sprockets.

e. Check for correct “missing bearing” sensor positioning relative to the switch pin sensor (4-1/2” upstream of the pin sensor) and clean the sensor window.
f. Observe the sensor indicator light while the sorter is being manually turned or is running slowly, to determine correct operation.
   i. The “missing bearing” sensor should turn on (triggered by the presence of the shoe pin bearing) before the pin sensor turns on, and should turn off after the pin sensor turns off.
   ii. If a shoe pin without a bearing passes the “missing bearing” sensor, the “missing bearing” sensor should NOT turn on before the pin sensor turns on. The “missing bearing fault” will be set whenever the pin sensor turns on and the “missing bearing” sensor is still off.

Monitoring internal components of the sorter with the drive running (even at slow speeds) should only be performed by trained personnel who understand the hazards of the conveyor in operation. The sorter drive must be stopped and locked out before any mechanical adjustments are made.

7. Discharge photoeye fault (jam detection)
   a. The sorter will stop if the discharge eye is continuously blocked.
   b. Clean and/or realign the eye if necessary, and clear any product jams.

7 Maintenance

7.1 Slat and shoe repair, replacement, and service

1. See Figure 19 in Appendix 3 for an exploded view and part numbers
2. Recommended to swap the complete slat with a spare, so the slat can be rebuilt without keeping the sorter down for an extended period.
3. See Section 5.1.6 for a description of how to swap out slats. Removal is the reverse of installation.

7.2 Divert switch repair, replacement, and service

1. See Figure 22 and Figure 23 in Appendix 3 for exploded view and part numbers
2. Recommended to swap the complete switch with a spare, so the switch can be rebuilt without keeping the sorter down for an extended period.
3. The divert switch assembly hangs from the sorter frame with four carriage bolts (accessed from underneath the switch).
4. See Figure 20 and Figure 21 in Appendix 3 for details on installing and removing divert switches.
5. When swapping out the switch, ensure that the new switch is aligned with the pin guide and that the shoe pins are correctly positioned inside the pin channel of the switch.
6. If the switch is the first divert on the sorter (closest to the tail section), then the “missing bearing” sensor will need to be removed from the existing switch assembly and installed on the replacement switch assembly.

Running the sorter with a switch missing or misaligned can cause damage to the slats, shoes, and pin guide.

7.3 Chain Adjustment

All chains should be kept well lubricated. If slack develops in the chain, adjustments should be made by qualified maintenance personnel.

1. Periodically check the chain for excessive wear. See the Diamond Chain Roller Chain Wear Gauge Instructions for a detailed procedure.
   a. The maximum acceptable elongation is 1.5%. The chain will need to be replaced if it has elongated more than 1.5%.

Rapid or uneven chain wear is a sign of insufficient lubrication.

2. As the chain wears, the chain will have to be cut and re-spliced if the total loop length becomes too long (as indicated by an alert from the catenary chain sensor).
   a. See the Diamond Series Product Catalog for instructions on splicing chain
   b. Grind the peened over ends of the chain pins flush with the link plate before pressing them out, else the chain bushings will be damaged.
   c. When reducing the chain length to compensate for wear, it is recommended to break the chain at the short section that was cut to length during installation, instead of taking a link out of a full section.
   d. Always put chain connecting links directly across from each other.
   e. Chain can only be cut and spliced in full slat increments (every four pitches).

7.4 Sprocket Adjustment and Replacement

Sprockets should be periodically checked for misalignment or excessive tooth wear.

1. Rapid side wear is a sign of chain misalignment. Chain link plates should not touch the sides of the sprockets if the sprockets are aligned properly.

2. Rapid tooth wear can be caused by the chain “jumping” the sprocket, or can be caused by debris or abrasive grit inside the sorter.

If the chain is allowed to “jump” or skip teeth on the sprocket, which can happen if the sorter is rapidly braked to a stop, the slats, chain, or sprockets may be damaged. Shut down the sorter and inspect for damage before continuing operation. The chain must be manually placed back on the sprocket before restarting the sorter. Running the sorter with the chain not properly seated on the sprocket will cause rapid wear to the chain and sprocket, and may also damage slats.

3. A correctly aligned, well lubricated sprocket should last the life of the chain.
4. Best practice is to replace sprockets when replacing the chain, as worn sprockets can cause rapid wear on a new chain.
    a. If the trailing side of the sprocket tooth is unworn and the sprockets do not have excessive side wear, additional life may be gained by swapping left and right sprockets to use the unworn side of the tooth profile. For tail sprockets, the shaft will also need to be flipped end-for-end.
    b. It is not necessary to replace sprockets when replacing only a short section of chain, unless the sprockets show signs of excessive wear or damage.

7.4.1 Tail Sprocket Replacement Procedure

1. See Figure 26 and Figure 27 in Appendix 3 for general arrangement drawings showing the tail assembly.
2. Shut down and lock out the sorter.
3. Remove guiderail, chain guards, and slats around the tail section to provide a clear working area (approximately 10’ or 24 slats). Ensure that a connecting link is included in the removed section.
4. Secure the chain to the sorter frame on both the top and bottom of the sorter, and take tension until the chain around the tail sprocket is slack.
5. Remove the connecting link on each side and unwrap the chain from the sprocket, taking care not to damage the chain mounts on each chain.
6. Remove the tailshaft encoder(s) and all bearing guards on both sides of the tail.
7. Clean the exposed portion of the shaft of any rust or residue, to ensure that shaft components will slide freely. If needed, apply a light lubricant or penetrating oil to ease disassembly.
8. Remove the shaft collars securing the tail sprockets to the shaft (balloon (14) and (15) in Figure 26) and loosen the set screws on the keyed sprocket (balloon (8) in Figure 26). Verify both sprockets slide freely along the shaft.
9. Loosen the bolts securing both bearings (balloon (2) in Figure 26) to the tail frame, just enough where the bearings are allowed to move independently. Do not remove the bolts.
    a. Remove any burrs caused by the set screws on the keyed sprocket before proceeding.
10. Loosen the set screws on both bearings (balloon (2) in Figure 26). Verify the shaft slides smoothly inside the bearing bores.

Do not hammer on the end of the shaft. If the shaft is stuck, apply pressure on the inner race of the bearings only. Hammering or excessive pressure will damage the bearing races.

11. Slide the shaft out partially, taking care to support the weight of the shaft as it is no longer supported on both sides. Continue until there is enough space to remove a sprocket.
    a. Remove any burrs caused by the set screws on the bearings before proceeding.

Sorter tail components are heavy (approximately 130 to 145 lbs for a tail shaft with 2 sprockets). Use safe lifting/rigging practices and mechanical lifting equipment to support the loads.

12. Slide the sprockets off the end of the shaft and remove them from the sorter.
13. Inspect the shaft for burrs, gouges, or other damage. Remove the shaft entirely if needed for a thorough inspection. File any burrs down so shaft components can slide freely. Clean the shaft surface of any rust or adhered debris.
14. Inspect both bearings for any side play, unusual noise or binding, or damage. If damage is noted, or if excessive force was used in disassembly (hammering on the shaft or pressing without the inner bearing race adequately supported), replace the damaged bearing(s) at this time.
15. If the sprockets are to be reused by reversing them, thoroughly inspect each tooth for damage (trailing edge or side wear, cracks, chips, etc.) and do not use if damaged. If both sprockets are suitable, flip the shaft end-for-end so that the key is on the opposite side of the sorter, which will allow the sprockets to be installed in the reverse orientation.
16. Coat the bores of the replacement sprockets with antiseize.
17. If the shaft was removed entirely, slide it back into the bearing on one side.
18. Slide both replacement sprockets back onto the shaft, orienting them hub-to-hub and ensuring that the keyed sprocket is on the side with a keyway. Do not secure the sprockets yet.
19. Slide the shaft into the opposite bearing bore and approximately center it. Do not tighten set screws on either bearing. Clean off any excess antiseize around the witness marks on the shaft.
20. Using a thin piece of flat shim stock (e.g. a .001” feeler gauge), carefully align the outboard shaft collar on each side with the machined witness marks in the shaft. Once the shaft collars are aligned, torque the shaft collar bolts to 27 ft-lb.
    a. Ensure the shaft collars are clamped to a clean shaft surface with no oil or antiseize underneath the clamping area of the collar.
21. Place the key into the keyway, then slide each sprocket until it firmly rests against the outboard shaft collar. Install the inboard shaft collars and torque the bolts to 27 ft-lb.
    a. Ensure the shaft collars with wide welded flanges (balloon (15) in Figure 26) are paired with the non-keyed sprocket (balloon (7) in Figure 26), and that the regular shaft collars (balloon (14) in Figure 26) are paired with the keyed sprocket (balloon (8) in Figure 26).
    b. Ensure the shaft collars are clamped to a clean shaft surface with no oil or antiseize underneath the clamping area of the collar.
    c. Once both shaft collars are installed, verify that the sprocket is constrained with minimal side play (<0.010”) between the two shaft collars, and verify that the non-keyed sprocket can rotate on the shaft without binding.
22. Torque the set screws on the keyed sprocket to 51 ft-lb. If the non-keyed sprocket has set screws, remove them entirely and fill the holes with grease to prevent corrosion.
23. Snug up the bolts securing the bearings to the tail frame (finger tight), so that the bearings do not slide freely but may be adjusted by the jack screws.
24. Adjust the tail bearings such that the tail shaft is square to the sorter frame, using the jack screws indicated by note flag 9 in Figure 26.
25. Torque tail bearing bolts to 75 ft-lb.

26. Using calipers, center the tail shaft and sprockets in between the tail sideframes. Measure at least (4) places (every 90° of shaft rotation) around the perimeter of each sprocket, and average the measurements.
27. Torque the set screws on both bearings to 21 ft-lb.
28. Verify that the tail shaft assembly still rotates freely on its bearings.
29. Lay the chains onto the sprockets and reinstall both connecting links. Remove chain attachments to the sorter frame.
30. Reinstall slats.
31. Verify that the chain links are approximately centered on the sprocket centerline on both sides.
32. Reinstall the tailshaft encoder and all guarding and guiderail that was removed.
33. Jog the sorter slowly, monitoring for any rubbing or unusual noises.

7.4.2 Drive Sprocket Replacement Procedure

1. See Figure 28 and Figure 29 in Appendix 3 for general arrangement drawings showing the drive assembly.
2. Shut down and lock out the sorter.
3. Disconnect the wiring to the motor's junction box. Label all phase connections so the motor may be reconnected with the same direction of rotation.
4. Support the weight of the drive motor with a suitable lifting apparatus (see Table 6 in Appendix 1 for a list of motor weights), then pull out the torque arm pin and rotate the motor to clear the torque arm mounting bracket.
5. Remove the drive motor from the motor shaft.

Sorter drive components are heavy (drive motors can weigh up to 840 lbs). Use safe lifting/rigging practices and mechanical lifting equipment to support the loads.

6. Remove guiderail, chain guards, and slats around the drive section to provide a clear working area (approximately 10' or 24 slats). Ensure that a connecting link is included in the removed section.
7. Secure the chain to the sorter frame on both the top and bottom of the sorter, and take tension until the chain around the drive sprocket is slack.
8. Remove the connecting link on each side and unwrap the chain from the sprocket, taking care not to damage the chain mounts on each chain. Ensure that the chain in the catenary is supported and not allowed to fall once it is removed from the drive sprocket.
9. Remove all bearing guards on both sides of the drive.
10. Clean the exposed portion of the shaft of any rust or residue, to ensure that shaft components will slide freely. If needed, apply a light lubricant or penetrating oil to ease disassembly.
11. Remove the shaft collars securing the drive sprockets to the shaft and loosen the set screws on the sprockets (balloon (5) in Figure 28). Verify both sprockets slide freely along the shaft.
    a. Remove any burrs caused by the set screws on the sprockets before proceeding.
12. Loosen the set screws on both bearings (balloons (2) and (3) in Figure 26). Verify the shaft slides smoothly inside the bearing bores.

Do not hammer on the end of the shaft. If the shaft is stuck, apply pressure on the inner race of the bearings only. Hammering or excessive pressure will damage the bearing races.

13. Slide the shaft out partially, taking care to support the weight of the shaft as it is no longer supported on both sides. Continue until there is enough space to remove a sprocket.
    a. Remove any burrs caused by the set screws on the bearings before proceeding.

WARNING

Sorter drive components are heavy (approximately 190 to 230 lbs for a drive shaft with 2 sprockets). Use safe lifting/rigging practices and mechanical lifting equipment to support the loads.

14. Slide the sprockets off the end of the shaft and remove them from the sorter.
15. Inspect the shaft for burrs, gouges, or other damage. Remove the shaft entirely if needed for a thorough inspection. File any burrs down so shaft components can slide freely. Clean the shaft surface of any rust or adhered debris.
16. Inspect both bearings for any side play, unusual noise or binding, or damage. If damage is noted, or if excessive force was used in disassembly (hammering on the shaft or pressing without the inner bearing race adequately supported), replace the damaged bearing(s) at this time.

NOTE

The bearing on the motor side (balloon (2) in Figure 26) is a spherical roller bearing, and the bearing on the non-motor side (balloon (3) in Figure 26) is a ball bearing.

17. If the sprockets are to be reused by reversing them, thoroughly inspect each tooth for damage (trailing edge or side wear, cracks, chips, etc.) and do not use if damaged. If both sprockets are in good condition, they may be swapped left-for-right to use the unworn trailing edge of the tooth.
18. Coat the bores of the replacement sprockets with antiseize.
19. If the shaft was removed entirely, slide it back into the bearing on one side.
20. Slide both replacement sprockets back onto the shaft, orienting them hub-to-hub. Do not secure the sprockets yet.
21. Slide the shaft into the opposite bearing bore and approximately center it. Do not tighten set screws on either bearing. Clean off any excess antiseize around the witness marks on the shaft.
22. Using a thin piece of flat shim stock (e.g. a .001” feeler gauge), carefully align the outboard shaft collar on each side with the machined witness marks in the shaft. Once the shaft collars are aligned, torque the shaft collar bolts to 49 ft-lb.
    a. Ensure the shaft collars are clamped to a clean shaft surface with no oil or antiseize underneath the clamping area of the collar.
23. Place each key into its keyway, then slide each sprocket until it firmly rests against the outboard shaft collar. Install the inboard shaft collars and torque the bolts to 49 ft-lb.
    a. Ensure the shaft collars are clamped to a clean shaft surface with no oil or antiseize underneath the clamping area of the collar.
    b. Once both shaft collars are installed, verify that the sprocket is constrained with minimal side play (<0.010”) between the two shaft collars.
24. Torque the set screws on the sprockets to 179 ft-lb.
25. Using calipers, center the drive shaft and sprockets in between the tail sideframes. Measure at least (4) places (every 90° of shaft rotation) around the perimeter of each sprocket, and average the measurements.
26. Torque the set screws on both bearings. Use 51 ft-lb for 1/2”-20 set screws and 21 ft-lb for 3/8”-24 set screws.
27. Verify that the drive shaft assembly still rotates freely on its bearings.

28. Apply antiseize onto the extended drive shaft that interfaces with the motor's hollow bore, and reinstall the motor. See the SEW Eurodrive Assembly and Operating Instructions for the correct torque value for the motor shaft retaining bolt.
29. Reconnect the motor wiring. Reconnect all phases in the same order they were connected previously.
30. (Optional) Supply power to the VFD, and briefly jog the motor at slow speed to verify direction of rotation. Lock out the sorter again before resuming work.

Only trained personnel that understand the hazards of energizing partially-assembled equipment should perform this procedure. Keep all personnel away from the exposed sprockets and shaft during this procedure and ensure that no tools or equipment (particularly the chain or its attachments to the sorter frame) is at risk of becoming entangled in the spinning sprocket.

31. Lay the chains onto the sprockets and reinstall both connecting links. Remove chain attachments to the sorter frame.
32. Reinstall slats.
33. Verify that the chain links are approximately centered on the sprocket centerline on both sides.
34. Reinstall all guarding and guiderail that was removed.
35. Jog the sorter slowly, monitoring for any rubbing or unusual noises.

7.4.3 Tail Shaft Adjustment Procedure

If needed, the tail shaft may be adjusted to finely control the amount of tension and sag in the catenary. This offers additional adjustment for scenarios in which removing an entire slat would be too large a change in chain length.

1. See Figure 26 and Figure 27 in Appendix 3 for general arrangement drawings showing the tail assembly.
2. Shut down and lock out the sorter.
3. Loosen the bolts securing both bearings (balloon (2) in Figure 26) to the tail frame, just enough where the bearings are allowed to move independently. Do not remove the bolts.
4. Loosen the set screws on one of the two tail shaft bearings. Verify that the bearing is able to move along the shaft. (Do not loosen the set screws on the other bearing, or the shaft will need to be re-centered in the frame.)
5. Snug up the bolts securing the bearings to the tail frame (finger tight), so that the bearings do not slide freely but may be adjusted by the jack screws.
6. Working evenly and in small increments across both sides, use the four jack screws indicated by note flag 9 in Figure 26 to push the bearing towards the infeed side of the sorter, or to release tension so that the bearings slide towards the discharge side of the sorter.
7. Adjust the tail bearings such that the tail shaft is square to the sorter frame, using the jack screws.
8. Check that the infeed pin rail U-guide is contacting the shoe pins along its entire travel, and that the bottoms of the bearings are not rubbing on the U-guide.
9. Torque tail bearing bolts to 75 ft-lb. Torque the side with tightened set screws first.
10. Torque the set screws on the tail bearings to 21 ft-lb.
11. Adjust the knife edge nosebar as needed. Adjusting the nosebar will also require a recheck of the knife edge belt tension. See section 5.1.7 for details on adjusting the horizontal and vertical position of the knife edge nosebar and adjusting knife edge belt tension.
12. Jog the sorter slowly, monitoring for any rubbing or unusual noises.

7.5 Recommended Preventative Maintenance Schedule

Table 4-Recommended Preventative Maintenance Schedule

✓	INTERVAL	DESCRIPTION OF CHECK
	Before each startup	Make sure the conveyor is clear of foreign objects and all personnel are safely away from moving parts.
	Once per shift	Visual and auditory inspection to check for oil leakages, hardware security, or any unusual noise that may indicate there is a problem with the equipment.
	Daily	Inspect all the photoeyes and proximity switches to make sure they are secure and properly aligned.
	Weekly	Check for product build-up around and on slats. Clean if necessary.
	Weekly	Visually inspect the slats for damage, unseated spring clips, excessive spillage/residue or other problems (additional inspections as needed based on maintenance history).
	Weekly	Refill the oiler (as needed) and monitor for correct oil consumption. 1. Ensure the oiler is dispensing oil at regular intervals (if the rate of usage drops significantly, it may indicate a clog or obstruction) and refill when necessary. 2. Refill with SAE 30 mineral oil or SAE 85W gear oil (ISO 100), for operation between 40°F and 100°F. a. Consult BSC for operation at temperatures outside these limits.
	Monthly or 300 hours	Clean the pin sensor windows in the divert switches. (Additional cleaning to be performed as needed if sensor faults are recorded.)
	Monthly or 300 hours	Verify free movement of the divert switch gate, verify the lead-ins and switch gate are undamaged, and clean out any accumulated debris or dirt in and around the switch gate mechanism and sliding surfaces.
	Monthly or 300 hours	Clean the surfaces of all slats to allow free motion of shoes.
	Monthly or 300 hours	Check for loose bolts, nuts, fittings, and sensors. Tighten if necessary.
	Monthly or 300 hours	Remove any accumulated debris on the

✓	INTERVAL	DESCRIPTION OF CHECK
		gearbox or motor housing.
	Monthly or 300 hours	Check the proper functioning of all proximity switches and photoeyes. Secure all mounting brackets, clean the lenses and reflectors, and replace any that are defective.
	After first 24 hours, and every 2 months or 500 hours thereafter	Check torque of all set screws (see ABB Instruction Manual for DODGE® Bearings for appropriate torque values).
	3 months or 1,000 hours	Regrease all bearings with No. 2 lithium complex base grease (see ABB Instruction Manual for DODGE® Bearings for detailed lubrication instructions).
	After first 100 hours or 2 weeks, and every 500 hours or 2 months thereafter	Stop the sorter, inspect the chain for proper lubrication, and monitor the chain elongation. 1. The chain should have a light coat of oil visible on its surface 2. If the chain is dripping with oil, the oiler flow rate is too high and may be reduced to prevent the contamination of slats and product with excess oil 3. Some oil dripping and accumulation is normal at both ends of the sorter 4. If the chain is excessively dirty or coated in dust/grit: clean it with kerosene or another appropriate solvent and run the oiler for two chain revolutions immediately on restarting the sorter 5. Remove one set of connecting links for inspection: the pin surface will be shiny and coated in lubrication if it is getting enough oil. a. The presence of red or brown residue, or a scored or galled pin surface means the chain is not getting enough oil: check for proper operation of the oiler b. If the oiler is functioning correctly, increase the oil flow and/or increase the frequency of oiling as necessary to keep the chain properly lubricated 6. Monitor the chain on both sides for elongation: maximum acceptable elongation is 1.5% before the chain must be replaced a. Measure 12 pitch lengths center-

✓	INTERVAL	DESCRIPTION OF CHECK
		to-center: 15-1/4” maximum measurement (measurement on a new chain would be 15”) b. Chains on both sides of the sorter must be replaced at the same time c. Uneven elongation is a warning that one side is not getting enough oil (chain that is starved for oil will wear faster) 7. Inspect sprockets for signs of misalignment or excessive tooth wear. Correct any misalignments if found. a. Replace sprockets if the tooth profile is “hooked” or reduced in section to where the tips of the teeth taper to sharp points b. Sprockets must be replaced in pairs c. As a general rule, sprockets should be replaced whenever the sorter chain is replaced. Severely worn sprockets can damage or rapidly wear a new chain. It is not necessary to replace sprockets (unless they are damaged) when replacing a short section of chain, if the rest of the chain is in good condition.
	6 months or 3000 hours	Check the oil level and oil condition in the drive motor gearbox. Top up or change the oil if needed. See the SEW Eurodrive Gear Unit Assembly and Operating Instructions for detailed instructions on oil replacement and service intervals.
	3 years	Replace the oil in the drive motor gearbox. See the SEW Eurodrive Gear Unit Assembly and Operating Instructions for detailed instructions on oil replacement and service intervals.

Appendix 1 Section Weights

Section weights do not include floor supports, accessories, guiderail, or crating.

Table 5-List of Section Weights

SORTER OAW (in)	DRIVE AND CATENARY (NOT INCLUDING MOTOR)		TAIL		DIVERT SECTION (SINGLE SIDED)		INTERMEDIATE SECTION	
	Length (in)	Section Weight (lbs)	Length (in)	Section Weight (lbs)	Length (in)	Section Weight (Lbs)	Length (in)	Section Weight (lbs)
36	88	1,343	30	424	80	593	50	315
					100	719	56	353
							80	505
							100	631
							110	694
							120	757
48	88	1,492	30	475	100	772	50	365
							56	409
							80	584
							100	730
							110	803
							120	876

Table 6-List of Drive Motor Weights

MOTOR HORSEPOWER	SPEED (FPM)	GEARBOX	HOLLOW BORE SIZE (IN)	WEIGHT (LBS)
5	200-240	KA77	2	170
	240-600	KA67	1 1/2	125
7.5	200-380	KA77	2	230
	380-600	KA67	1 1/2	185
10	200-250	KA87	2 3/8	305
	250-600	KA77	2	235
15	200-240	KA97	2 3/4	480
	240-360	KA87	2 3/8	360
	360-600	KA77	2	295
20	200-300	KA97	2 3/4	580
	300-600	KA87	2 3/8	460
25	250-380	KA97	2 3/4	620
	380-600	KA87	2 3/8	500
30	250-520	KA97	2 3/4	640
	520-600	KA87	2 3/8	530
40	340-600	KA97	2 3/4	840

Appendix 2 Oiler System Recommended Flow Rates and Lubrication Intervals

Table 7-Oiler Pump Runtime (in seconds) Per Lubrication Interval

SORTER SPEED (FPM)	LUBRICATION INTERVAL (MINUTES)	SORTER LENGTH (FEET)																			
		25	50	75	100	125	150	175	200	225	250	275	300	325	350	375	400	425	450	475	500
50	2940	77	137	197	257	317	377	437	497	557	617	677	737	797	857	917	977	1037	1097	1157	1217
100	1500	41	71	101	131	161	191	221	251	281	311	341	371	401	431	461	491	521	551	581	611
150	1020	29	49	69	89	109	129	149	169	189	209	229	249	269	289	309	329	349	369	389	409
200	780	23	38	53	68	83	98	113	128	143	158	173	188	203	218	233	248	263	278	293	308
250	630	19	31	43	55	67	79	91	103	115	127	139	151	163	175	187	199	211	223	235	247
300	540	17	27	37	47	57	67	77	87	97	107	117	127	137	147	157	167	177	187	197	207
350	450	15	24	32	41	50	58	67	75	84	92	101	110	118	127	135	144	152	161	170	178
400	420	14	22	29	37	44	52	59	67	74	82	89	97	104	112	119	127	134	142	149	157
450	360	13	20	26	33	40	46	53	60	66	73	80	86	93	100	106	113	120	126	133	140
500	330	12	18	24	30	36	42	48	54	60	66	72	78	84	90	96	102	108	114	120	126
550	300	12	17	22	28	33	39	44	50	55	61	66	72	77	82	88	93	99	104	110	115
600	300	11	16	21	26	31	36	41	46	51	56	61	66	71	76	81	86	91	96	101	106

Table 8-Recommended Lubricant Flow Rates and Lubrication Intervals

SORTER SPEED (FPM)	LUBRICANT FLOW RATE		LUBRICATION INTERVAL (MIN)
	fl oz/min	ml/min	
50	0.2	5	2940
100	0.3	10	1500
150	0.5	14	1020
200	0.6	19	780
250	0.8	24	630
300	1.0	29	540
350	1.1	34	450
400	1.3	38	420
450	1.5	43	360
500	1.6	48	330
550	1.8	53	300
600	1.9	58	300

Appendix 3 General Arrangement Drawings

ITEM NO.	PART NUMBER 36" OAW	PART NUMBER 48" OAW	QTY	UNITS	DESCRIPTION
1	Z075SA-16042	Z075SA-16079	1	EA	ASM, SHOE SORTER SLAT
2	Z077SC-21822		1	EA	SHOE, SHOE SORTER SLAT
3	Z077SC-22025		1	EA	BALL BEARING, 6202-2RS WITH SPECIAL 0.625in ID, WITH 1.750in OD URETHANE TIRE
4	Z077SC-22028		1	EA	SLIDER, SHOE SORTER SLAT
5	Z078SW-10001		1	EA	WELD, SHOE SORTER SLAT DIVERT PIN
6	A003SH-00228		2	EA	SHCS, 1/4"-20 UNC X 1 3/4"L, ASTM A574, BLACK OXIDE, PARTIAL THD
7	A003RR-10008		1	EA	RETAINING RING, 5/8" ID, EXTERNAL, BLACK OXIDE
8	Z077SC-30002		4	EA	PRECISION WASHER, SHOE SORTER SLAT, 0.875in OD, 0.385in ID, 0.060in THICK
9	Z075SA-16040		2	EA	ASM, SHOE SORTER CHAIN, CHAIN MOUNT
10	A003RR-10004		4	EA	3/8" E RING
11	Z077SC-19xxx, WHERE xxx IS CHAIN LENGTH IN NUMBER OF PITCHES		VARIES	EA	ROLLER CHAIN, ANSI #100, SHOE SORTER EXTENDED PIN, CLASS I LENGTH MATCHED
12	Z077SC-22027		2	EA	LEVER, SHOE SORTER SLAT
13	Z077SC-19000		VARIES	EA	ROLLER CHAIN CONNECTOR LINK, ANSI #100, SHOE SORTER EXTENDED PIN, SLIP FIT
14	Z077SC-30001		2	EA	SPRING CLIP, SHOE SORTER SLAT, HEAVY DUTY

B REVISION DESCRIPTION: UPDATED SHOE BOLT NOTE, ADDED PART NUMBER FOR 48"OAW ASM

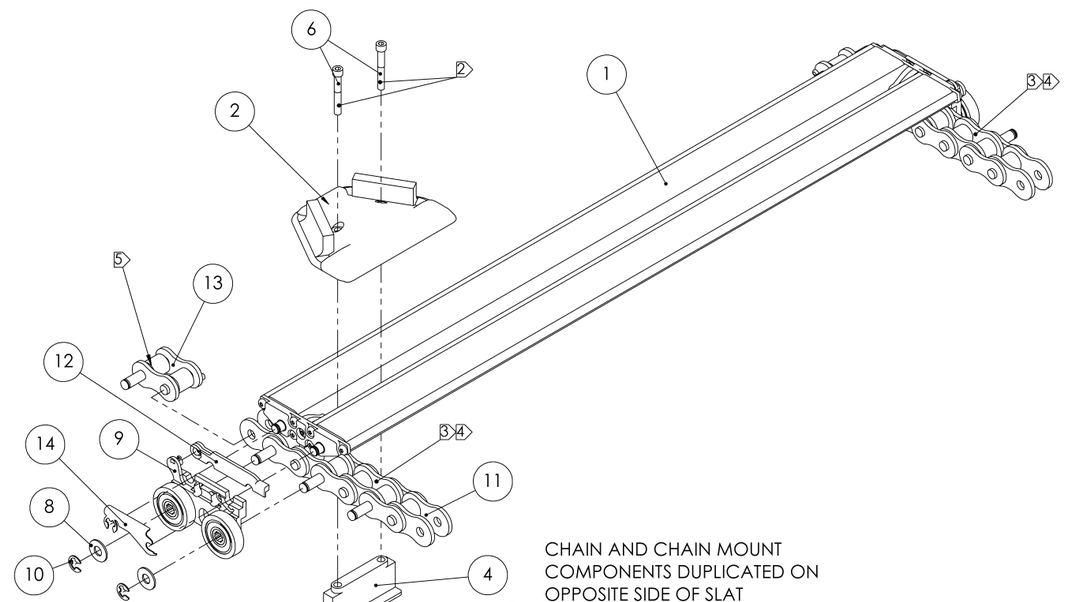

CHAIN AND CHAIN MOUNT COMPONENTS DUPLICATED ON OPPOSITE SIDE OF SLAT

NOTES:

1. APPLY RED LOCTITE 263 THREADLOCKER TO INTERNAL THREADS ON DIVERT PIN WELDMENT BEFORE INSTALLING SHOE BOLTS. DO NOT ALLOW LOCTITE TO GET ON PLASTIC COMPONENTS (SHOE AND SHOE SLIDER) AS IT CAN CAUSE THEM TO FAIL PREMATURELY. SHOE BOLTS ARE GENERALLY REMOVABLE WITHOUT USE OF HEAT DESPITE THE USE OF PERMANENT THREADLOCKER, DUE TO OIL ON THREAD SURFACE.
2. SHOE BOLTS ARE TO BE FINGER TIGHT ONLY. OVERTIGHTENING CAN CAUSE CRACKS TO FORM IN SHOE OVER TIME. B
3. CHAIN IS AVAILABLE IN 4 PITCH (1 SLAT) INCREMENTS FROM 4 PITCHES (1 SLAT) TO 248 PITCHES (62 SLATS). CONNECTOR LINK IS INCLUDED IN PITCH COUNT. AVAILABLE IN MATCHED PAIRS ONLY.
4. CHAIN SHIPPED WITH CHAIN MOUNTS FACTORY-INSTALLED IS AVAILABLE AS PART NUMBER Z075SA-000xx, WHERE xx IS THE NUMBER OF SLATS IN THE CHAIN SECTION (1 TO 62). AVAILABLE IN MATCHED PAIRS ONLY.
5. CONNECTOR LINKS ARE INCLUDED WITH EVERY CHAIN SECTION, BUT ARE ALSO AVAILABLE SEPARATELY FOR REPAIR PURPOSES.

Bastian SOLUTIONS
a TOYOTA ADVANCED LOGISTICS company
1821 BASTIAN COURT
WESTFIELD, IN 46074
www.BastianSolutions.com

ORIGINATOR: B. BAKER
CHECKER: E. GRIMES
APPROVER: S. OSTERHOUT
APPROVAL DATE: 5/3/2021
TITLE: GENERAL ARRANGEMENT, SHOE SORTER SLAT AND CHAIN EXPLODED VIEW, MULTIPLE OAW, MULTIPLE LENGTHS
DOCUMENT NUMBER: GA-SHOE-MW-ML-0005
REVISION: B
SHEET 1 OF 1

Figure 19-General Arrangement, Shoe Sorter Slat and Chain Exploded View, Sheet 1 of 1

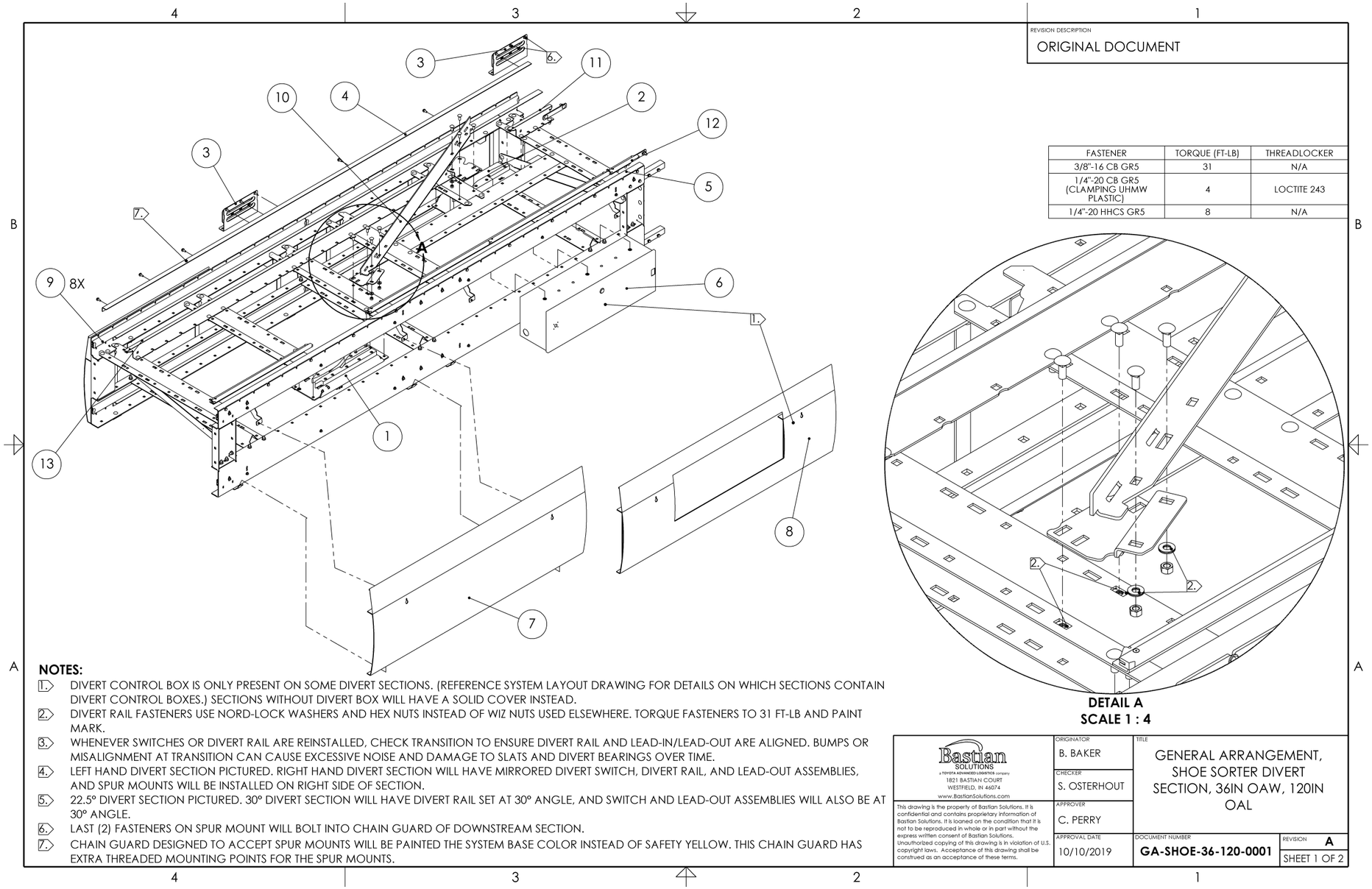

Figure 20-General Arrangement, Shoe Sorter Divert Section, Sheet 1 of 2

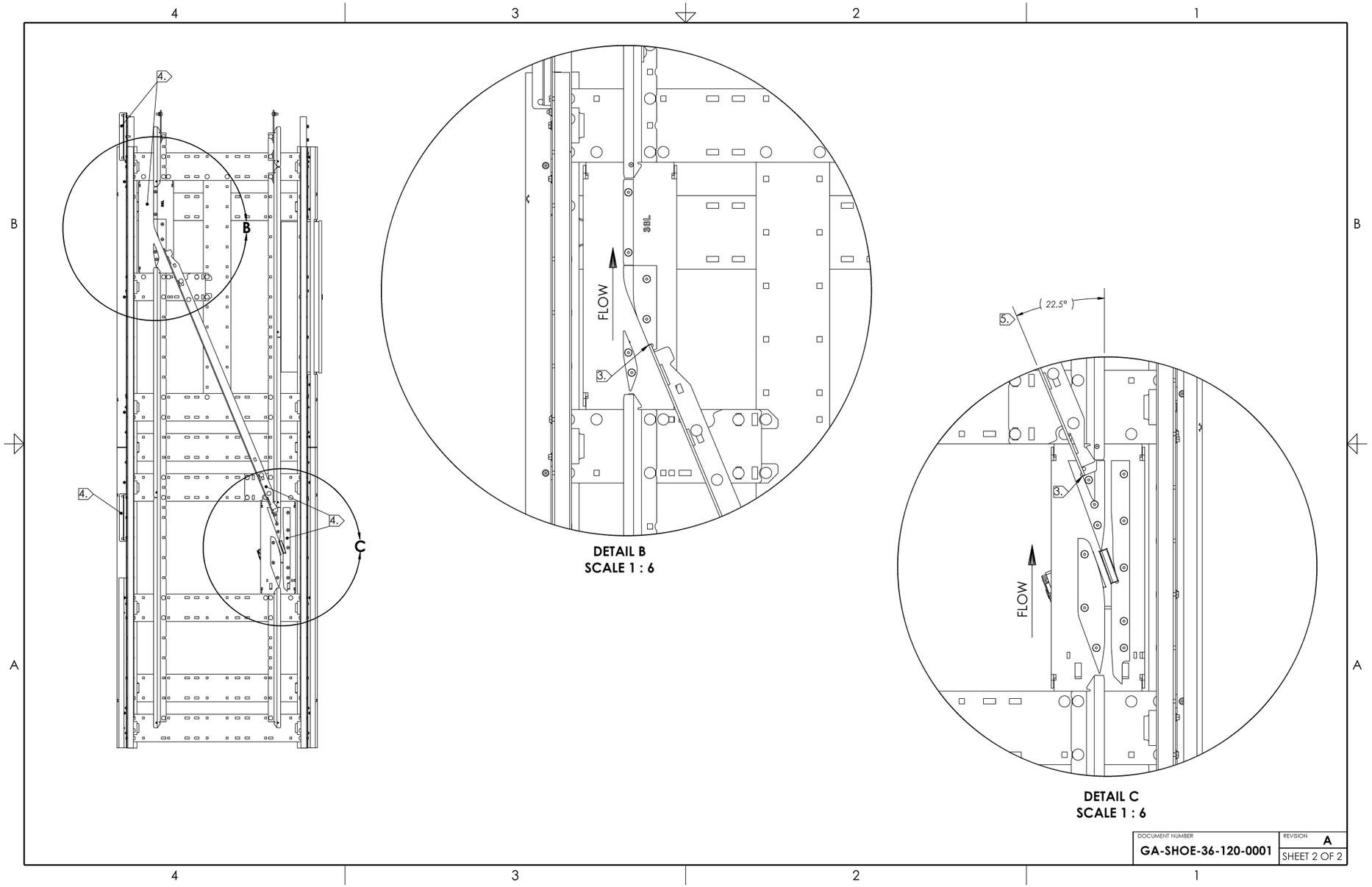

Figure 21-General Arrangement, Shoe Sorter Divert Section, Sheet 2 of 2

Table 9-BOM for GA-SHOE-36-120-0001

ITEM NO.	PART NUMBER								QTY	UNITS	DESCRIPTION
	36” OAW				48” OAW						
	30° RIGHT	30° LEFT	22° RIGHT	22° LEFT	30° RIGHT	30° LEFT	22° RIGHT	22° LEFT			
1	Z075SA-16125	Z075SA-16117	Z075SA-16057	Z075SA-16037	Z075SA-16125	Z075SA-16117	Z075SA-16057	Z075SA-16037	1	EA	ASM, SHOE SORTER TEKNIC SWITCH
2	Z075SA-16124	Z075SA-16111	Z075SA-16059	Z075SA-16024	xxx	xxx	Z075SA-16083	Z075SA-16084	1	EA	ASM, SHOE SORTER DIVERT RECEIVER
3	Z078SW-10021								2	EA	WELD, SHOE SORTER SPUR MOUNTING BRACKET
4	VARIES WITH SECTION LENGTH AND SPUR MOUNTING CONFIGURATION								1	EA	PEM ASM, SHOE SORTER CHAIN GUARD, 22deg/30deg DIVERT
5	Z076SP-10080*		Z076SP-10096*		Z076SP-10100*		Z076SP-10120*		1	EA	PEM ASM, SHOE SORTER CHAIN GUARD
6	A002CC-10001								1	EA	PLC CONTROL, SHOE SORTER DIVERT, WITH 48V 20A POWER SUPPLY, 460V INPUT
7	Z075SA-150xx, where “xx” is the cover length in inches (length varies depending on section configuration)								1	EA	ASM, SHOE SORTER SIDE COVER
8	Z075SA-15102								1	EA	ASM, SHOE SORTER SIDE COVER, 60in L, DIVERT BOX
9	A012SC-100xx, where “xx” is the chain guide extrusion length in inches (length varies depending on section configuration)								8	EA	CHAIN GUIDE EXTRUSION, SHOE SORTER
10	Z075SA-16113	Z075SA-16114	Z075SA-16025	Z075SA-16026	xxx	xxx	Z075SA-16083	Z075SA-16084	1	EA	ASM, SHOE SORTER DIVERT RAIL
11	Z075SA-11012	Z075SA-10012	Z075SA-11012	Z075SA-10012	Z075SA-11012	Z075SA-10012	Z075SA-11012	Z075SA-10012	1	EA	ASM, SHOE SORTER PIN GUIDE, 12in L
12	Z075SA-10008	Z075SA-11008	Z075SA-10008	Z075SA-11008	Z075SA-10008	Z075SA-11008	Z075SA-10008	Z075SA-11008	1	EA	ASM, SHOE SORTER PIN GUIDE, 8in L
13	A012SP-100xx, where “xx” is the pin guide length in inches (lengths vary depending on section configuration)								VARIES	EA	PIN GUIDE EXTRUSION, SHOE SORTER

*Typical lengths given, nonstandard section lengths are available. Part number for a nonstandard section length will be “Z076SP-10xxx” where “xxx” is the section length in inches; e.g. “Z076SP-10096” for a 96”L section.

ITEM NO.	PART NUMBER				QTY	UNITS	DESCRIPTION
	22.5° LEFT DIVERT	22.5° RIGHT DIVERT	30° LEFT DIVERT	30° RIGHT DIVERT			
1	Z077SC-10099				1	EA	GUIDE, OUTER PIN SWITCH, SHOE SORTER, LOW
2	Z077SC-10101	Z077SC-10180	Z077SC-10101	Z077SC-10180	1	EA	GUIDE, INSIDE PIN, SHOE SORTER
3	A003BR-00001				2	EA	DOUBLE SEALED NEEDLE ROLLER BRNG 1/4" ID 7/16" OD
4	Z077SC-10098				1	EA	BLADE, POP-UP, SHOE SORTER
5	A003SB-10011				2	EA	SHOULDER BOLT, #10-32 X 3/4" L, 0.25in SHOULDER DIA
6	A002SE-10054				1	EA	SENSOR, PHOTOELECTRIC FORK, 80mm W
7	Z077SC-10115	Z077SC-10183	Z077SC-10234	Z077SC-10237	1	EA	GUIDE, OUTLET PIN, SHOE SORTER
8	A013TM-10009				1	EA	DC SERVO MOTOR, TEKNIC MCPV-2321S
9	A002SE-10053				1	EA	SENSOR, PHOTOELECTRIC FORK, 20mm W
10	Z077SC-10100				1	EA	BLOCK, POP-UP GUIDE, SHOE SORTER
11	A003SH-00091				3	EA	SHCS, #8-32 Thd, 3/4"L, ALLOY STEEL, BLACK-OXIDE, Full Thd
12	A003SS-10004				2	EA	SET SCREW, #8-32 X 1/4" L, KNURL CUP POINT, ALLOY STEEL
13	A003HC-00012				4	EA	HHCS, 1/4"-20 UNC X 1 3/4"L, GR5, ZINC PLATED, PARTIAL THD
14	A003FS-00126				1	EA	FHCS, 1/4"-20 UNC X 2 1/2"L, ASTM F835, BLACK OXIDE, PARTIAL THD
15	A003FS-00123				10	EA	FHCS, 1/4"-20 UNC X 1 3/4"L, ASTM F835, BLACK OXIDE, PARTIAL THD
16	A003UP-10029				4	EA	SPACER, 1/4" SCREW SIZE, 21/64" OD, 1in L, SLOTTED, ZINC PLATED STEEL
17	A003IW-10017				4	EA	SPLIT LOCK WASHER, 3/8", HIGH COLLAR, ASME B18.21.1, STEEL

REVISION DESCRIPTION
UPDATED EXPLODED VIEW, BOLT TORQUE, AND ASSEMBLY NOTES RELATED TO THE DIVERT SWITCH GUIDE BLOCK AND GUIDE CLAMPS

FASTENER	TORQUE (IN-LB)	THREADLOCKER
1/4"-20 FHCS	48	N/A
1/4"-20 HHCS GR5	101	N/A
#10-32 SHCS ASTM A574	80	N/A
#10-32 SHOULDER BOLT	25	N/A
#10-32 CB STAINLESS	30	N/A
#8-32 SHCS ASTM A574	48	LOCTITE 243
#8-32 SET SCREW	23	N/A
M4 SHCS	51	N/A

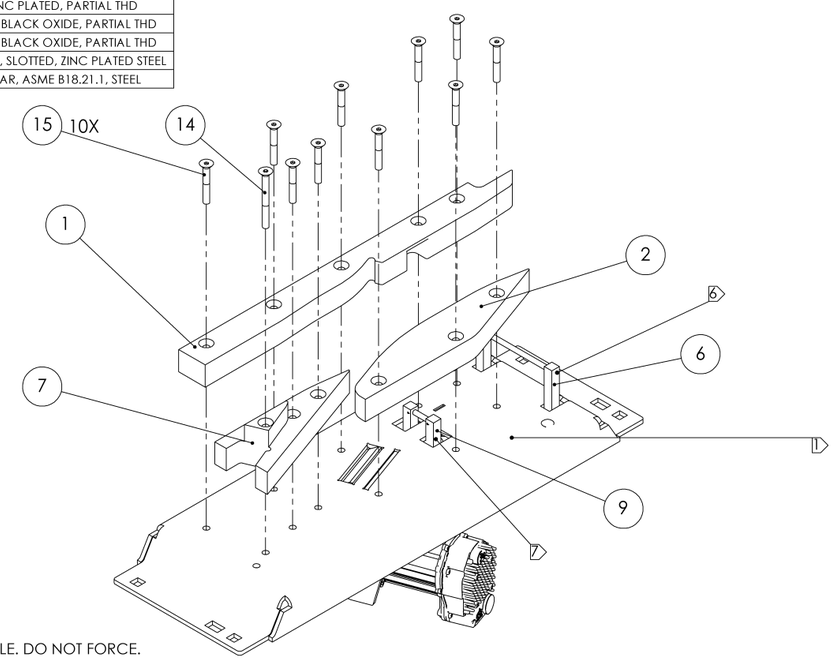

NOTES:

1. LEFT DIVERT PICTURED. RIGHT DIVERT IS MIRRORED ASSEMBLY.
2. SECURE HUB TO MOTOR SHAFT WITH LOCTITE 648 RETAINING COMPOUND. USE LOCALIZED HEAT ON HUB TO DISASSEMBLE. DO NOT FORCE.
3. POP-UP BLADE MUST BE ABLE TO SLIDE FREELY INSIDE ITS GUIDES. B
4. SLIGHT DRAG AT THIS PIVOT DUE TO THE SPRING WASHERS IS NORMAL. B
5. DIVERT BASE PLATE AND DIVERT GUIDES HIDDEN IN THIS VIEW FOR CLARITY.
6. MISSING BEARING SENSOR SHOULD BE REMOVED DURING CHAIN INSTALLATION TO PREVENT IT GETTING DAMAGED. MISSING BEARING SENSOR IS ONLY PRESENT ON FIRST DIVERT SWITCH.
7. PIN SENSOR
8. SLATS AND SHOE PINS SHOWN FOR REFERENCE IN THIS VIEW.
9. BEAM OF BEARING SENSOR IS BROKEN BY BEARING BEFORE BEAM OF PIN SENSOR IS BROKEN BY DOWNSTREAM PIN, AS SHOES TRAVEL IN FLOW DIRECTION. IF BEARING WAS NOT PRESENT, BEAM OF BEARING SENSOR WOULD BE BROKEN BY PIN SURFACE AFTER BEAM OF PIN SENSOR IS BROKEN BY DOWNSTREAM PIN.

Bastian SOLUTIONS
a TOYOTA ADVANCED LOGISTICS company
1821 BASTIAN COURT
WESTFIELD, IN 46074
www.BastianSolutions.com

ORIGINATOR: B. BAKER
CHECKER: E. GRIMES
APPROVER: S. OSTERHOUT
APPROVAL DATE: 5/03/2021
TITLE: GENERAL ARRANGEMENT, SHOE SORTER DIVERT SWITCH, MULTIPLE OAW, MULTIPLE LENGTHS
DOCUMENT NUMBER: GA-SHOE-MW-ML-0006
REVISION: B
SHEET 1 OF 3

Figure 22-General Arrangement, Shoe Sorter Divert Switch, Sheet 1 of 3

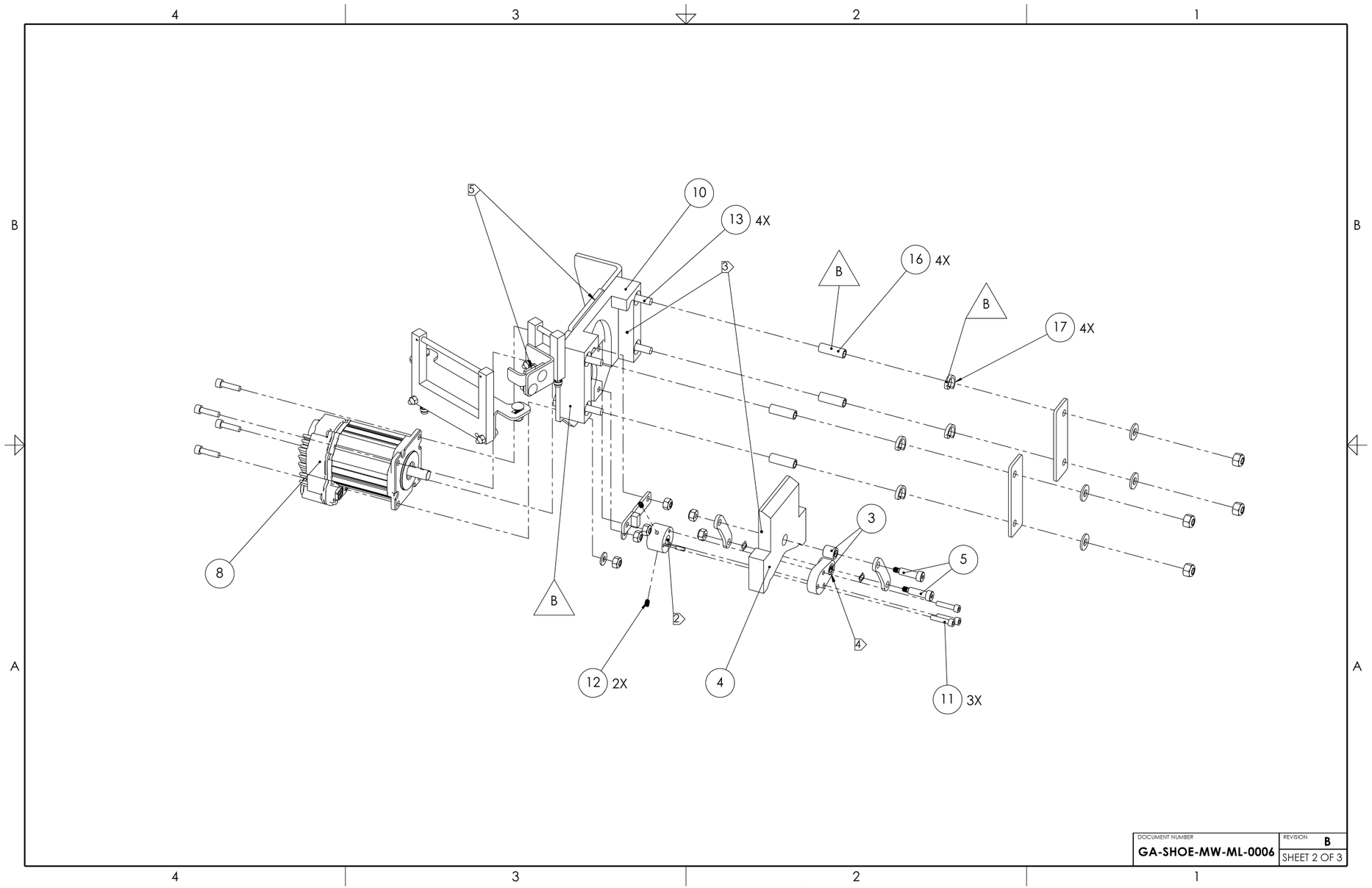

Figure 23-General Arrangement, Shoe Sorter Divert Switch, Sheet 2 of 3

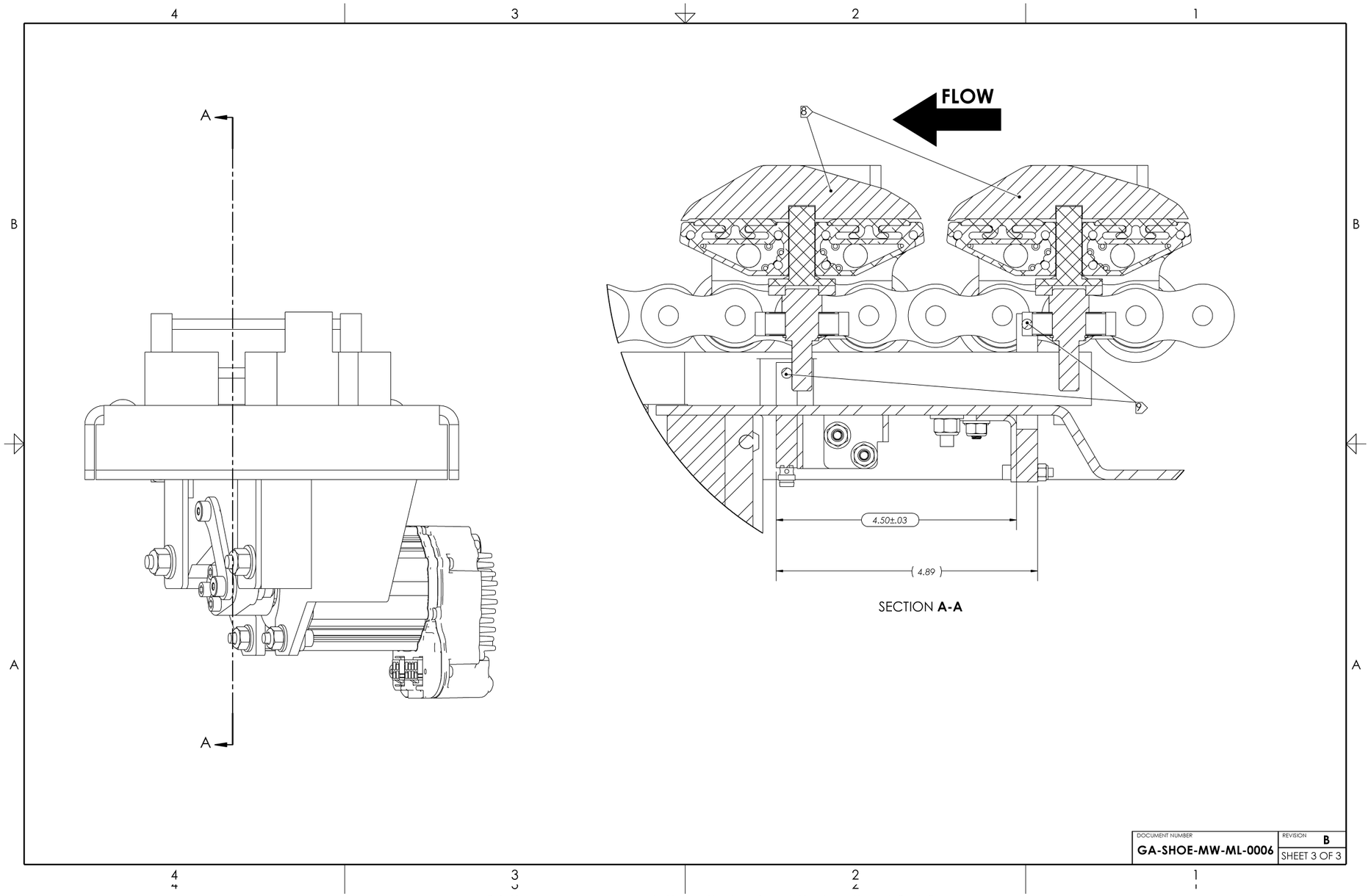

Figure 24-General Arrangement, Shoe Sorter Divert Switch, Sheet 3 of 3

ITEM NO.	PART NUMBER								QTY	UNITS	DESCRIPTION
	22.5° DIVERT				30° DIVERT						
	36" OAW RIGHT	36" OAW LEFT	48" OAW RIGHT	48" OAW LEFT	36" OAW RIGHT	36" OAW LEFT	48" OAW RIGHT	48" OAW LEFT			
1	Z075SA-16022	Z075SA-16023	Z075SA-16086	Z075SA-16085	Z075SA-16110	Z075SA-16112	xxx	xxx	1	EA	ASM, SHOE SORTER FIRST DIVERT RECEIVER
1.1	Z077SC-10097		Z077SC-10203		Z077SC-10097		xxx		1	EA	BLOCK, LEAD-OUT PIN GUIDE, SHOE SORTER
1.2	Z077SC-10105	Z077SC-10106	Z077SC-10105	Z077SC-10106	Z077SC-10232	Z077SC-10231	xxx	xxx	1	EA	BLOCK, DIVERT LEAD-OUT, SHOE SORTER
2	Z075SA-16059	Z075SA-16024	Z075SA-16089	Z075SA-16088	xxx	Z075SA-16111	xxx	xxx	1	EA	ASM, SHOE SORTER DIVERT RECEIVER
2.1	Z077SC-10097		Z077SC-10203, Z077SC-10213		Z077SC-10097		xxx		1	EA	BLOCK, LEAD-OUT PIN GUIDE, SHOE SORTER
2.2	Z077SC-10105	Z077SC-10106	Z077SC-10105	Z077SC-10106	Z077SC-10232	Z077SC-10231	xxx	xxx	1	EA	BLOCK, DIVERT LEAD-OUT, SHOE SORTER
2.3	Z077SC-10181	Z077SC-10104	Z077SC-10181	Z077SC-10104	Z077SC-10235	Z077SC-10230	xxx	xxx	1	EA	NOSE, DIVERT LEAD-OUT, SHOE SORTER
3	Z075SA-16027	Z075SA-16060	Z075SA-16027	Z075SA-16060	Z075SA-16115	xxx	xxx	xxx	1	EA	ASM, SHOE SORTER, SHOE RETURN
3.1	Z077SC-10113	Z077SC-10182	Z077SC-10113	Z077SC-10182	Z077SC-10233	xxx	xxx	xxx	1	EA	GUIDE, DIVERT RETURN PIN, SHOE SORTER

REVISION DESCRIPTION
ORIGINAL DOCUMENT

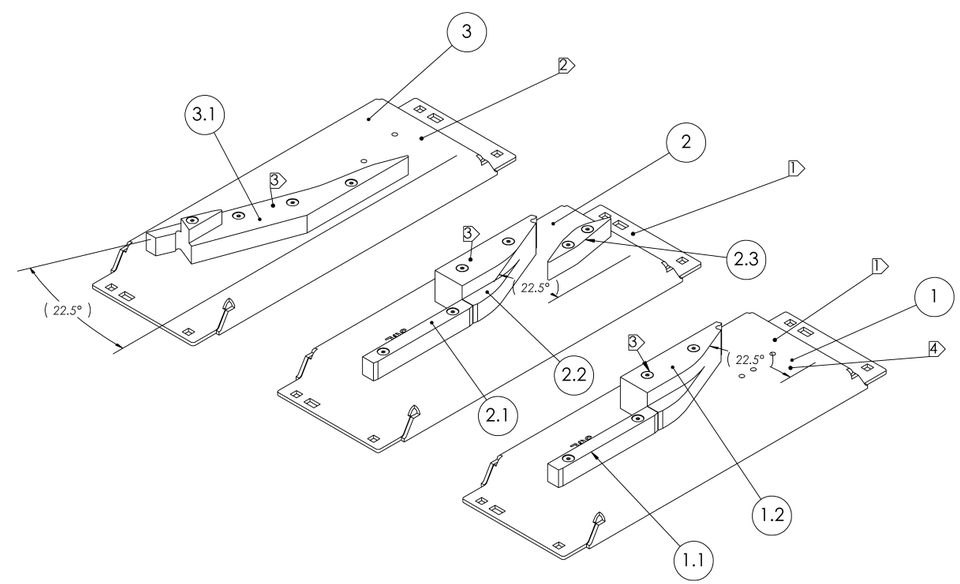

FASTENER	TORQUE (IN-LBS)	THREADLOCKER
1/4"-20 FHCS	125	N/A

NOTES:

1. LEFT HAND DIVERT RECEIVER SHOWN. RIGHT HAND IS MIRRORED.
2. RIGHT HAND SHOE RETURN SHOWN (RIGHT HAND SHOE RETURN WOULD BE USED FOR A LEFT DIVERT SORTER). LEFT HAND IS MIRRORED.
3. 22.5° DIVERT ANGLE SHOWN. 30° DIVERT ANGLE HAS THE SAME ASSEMBLY STRUCTURE BUT USES THE 30° PARTS.
4. FIRST DIVERT RECEIVER IS IDENTICAL TO OTHER DIVERT RECEIVERS EXCEPT FOR THE ABSENCE OF THE DIVERT LEAD-OUT NOSE. IT IS ONLY USED ON THE FIRST DIVERT OF THE SORTER, WHEN THERE ARE NO DIVERTED SHOES TO TRANSITION INTO THE DIVERT-SIDE SHOE PIN RAIL.

Bastian SOLUTIONS
a TOYOTA ADVANCED LOGISTICS Company
1821 BASTIAN COURT
WESTFIELD, IN 46074
www.BastianSolutions.com

ORIGINATOR: B. BAKER
CHECKER: S. OSTERHOUT
APPROVER: C. PERRY
APPROVAL DATE: 10/21/2019

TITLE: GENERAL ARRANGEMENT, SHOE SORTER DIVERT RECEIVER AND SHOE RETURN, MULTIPLE OAW, MULTIPLE OAL

DOCUMENT NUMBER: GA-SHOE-MW-ML-0008
REVISION: A
SHEET 1 OF 1

Figure 26-General Arrangement, Shoe Sorter Divert Receiver and Shoe Return, Sheet 1 of 1

ITEM NO.	PART NUMBER	QTY	UNITS	DESCRIPTION
1	A012SC-10012	4	EA	CHAIN GUIDE EXTRUSION, SHOE SORTER, 11.875in L
2	A003BR-10036	2	EA	MOUNTED BEARING, 2in BORE, 4 BOLT FLANGE, 210 SERIES, SETSCREW LOCKING
3	Z077SC-10019	1	EA	GUIDE, SHOE SORTER, TAIL, BOTTOM CHAIN, LEAD-OUT, STYLE A
4	Z077SC-10089	1	EA	TOP CHAIN GUIDE BLOCK, SHOE SORTER DRIVE MODULE, STYLE B
5	Z077SC-10020	1	EA	GUIDE, SHOE SORTER, TAIL, BOTTOM CHAIN, LEAD-OUT, STYLE B
6	Z077SC-10088	1	EA	TOP CHAIN GUIDE BLOCK, SHOE SORTER DRIVE MODULE, STYLE A
7	A001CP-10092	1	EA	SPROCKET, LOW RUNOUT, 40 TOOTH, FOR #100 CHAIN, 2in BORE
8	A001CP-10091	1	EA	SPROCKET, LOW RUNOUT, 40 TOOTH, FOR #100 CHAIN, 2in BORE, KEYED
9	Z077SC-10016	1	EA	SHAFT, SHOE SORTER, TAIL, 36in OAW
	Z077SC-10200			SHAFT, SHOE SORTER, TAIL, 48in OAW
10	A012SP-10063	1	EA	PIN GUIDE, SHOE SORTER, TAIL, U SHAPED, UHMW
11	A002SE-10052	1	EA	PHOTOEYE, RETRO-REFLECTIVE, 0.2m TO 15m SENSING RANGE, PNP, 4 PIN M12 CONNECTOR
12	A002MC-10017	1	EA	REFLECTOR, SMALL CUBE, 48mm HEX
13	A002CC-10008	1	EA	ENCODER, 0.375in HOLLOW BORE, 10,000 LINES, HTL, 5m L CABLE
14	A013SC-10002	2	EA	CLAMPING, TWO PIECE SHAFT COLLAR, FOR 2in SHAFT
15	Z078SW-10004	2	EA	WELD, SHOE SORTER TAIL SECTION, SHAFT COLLAR

REVISION DESCRIPTION
REV B

FASTENER	TORQUE (FT-LB)	THREADLOCKER
1/2"-13 HHCS & CB GR5	75	N/A
3/8"-16 HHCS & CB GR5	31	N/A
3/8"-16 HHCS WITH SQUARE NUTS (CLAMPING UHMW PLASTIC)	15	LOCTITE 243
1/4"-20 CB GR5 (CLAMPING UHMW PLASTIC)	4	LOCTITE 243
1/2"-20 SET SCREW	51	N/A
3/8"-24 SET SCREW	21	N/A
5/16"-24 SHCS ASTM A574	27	N/A

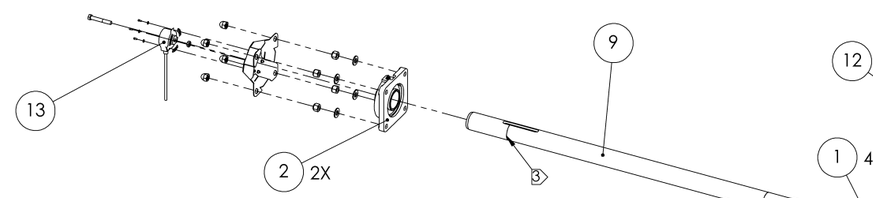

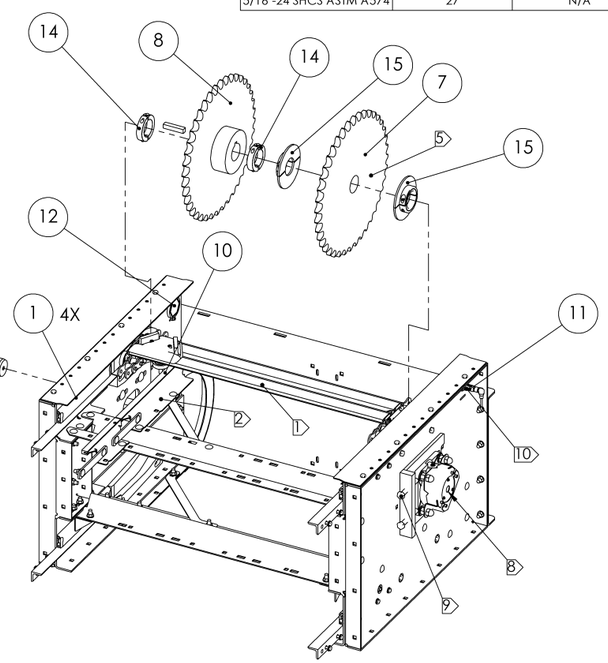

NOTES:

1. SEE "GA-SHOE-MW-ML-0005" FOR DETAILED VIEW OF SLAT AND CHAIN
2. DIVERT SIDE LEFT IS SHOWN. PIN GUIDE ASSEMBLY IS MIRRORED FOR DIVERT SIDE RIGHT, ALL OTHER ITEMS ARE THE SAME.
3. LINE UP OUTBOARD FACE OF SPROCKET WITH SCRIBE LINE ON TAIL SHAFT ±0.010" (WIDTH OF SCRIBE LINE).
4. SPROCKET AND SHAFT ARRANGEMENT MUST BE CENTERED IN DRIVE ±0.030" TO AVOID LATERAL FORCES ON CHAIN DUE TO CHAIN GUIDES LEADING INTO DRIVE. USE CALIPERS TO MEASURE BETWEEN SPROCKET FACE AND SIDE OF DRIVE WELDMENT.
5. INDICATED SPROCKET MUST SPIN FREELY ON SHAFT. **DO NOT TIGHTEN SET SCREWS ON THIS SPROCKET!** LUBRICATE BORE OF SPROCKET WITH ANTI-SEIZE WHEN INSTALLING OR REPLACING. SHAFT COLLARS MUST CONSTRAIN SPROCKET TIGHTLY (NO MORE THAN 0.010" TOTAL LATERAL MOVEMENT). WIPE OFF ANY ANTI-SEIZE ON SHAFT UNDERNEATH SHAFT COLLARS BEFORE INSTALLING.
6. WITH CHAIN AND SLATS INSTALLED, BOTH CHAINS SHOULD BE RUNNING APPROX. CENTERED ON SPROCKETS TO AVOID EXCESSIVE CHAIN WEAR.
7. CHAIN PINS SHOULD NOT RUB ON CHAIN GUIDE IN RUNNING POSITION. RUBBING INDICATES TAIL SHAFT AND SPROCKETS ARE NOT CORRECTLY CENTERED.
8. TAIL SHAFT IS TAPPED 3/8"-16 BOTH SIDES AND MOUNTING PROVISIONS ARE PROVIDED FOR 3/8" HOLLOW SHAFT ENCODER.
9. TAIL BEARINGS ARE ADJUSTABLE. ENSURE TAIL SHAFT IS ALWAYS SET SQUARE WITH FRAME OF SORTER. CENTER TAIL SHAFT IN TRAVEL WHEN POSSIBLE. IF ADJUSTMENT IS NEEDED FOR CHAIN TENSION, RECHECK SQUARE AND ENSURE SHOE PINS ARE RIDING ON PIN GUIDE WHEN ADJUSTMENT IS COMPLETE. ALWAYS LOOSEN BEARING BOLTS BEFORE ADJUSTMENT AND RE-TORQUE TO 75 FT-LB AFTER ADJUSTMENT. NEVER ADJUST TAIL POSITION WITH SORTER RUNNING.
10. TAIL DEBRIS SENSOR (RETROREFLECTIVE LASER PHOTOEYE)

Bastian SOLUTIONS
a TOYOTA ADVANCED LOGISTICS company
1821 BASTIAN COURT
WESTFIELD, IN 46074
www.BastianSolutions.com

ORIGINATOR: B. BAKER
CHECKER: S. OSTERHOUT
APPROVER: C. PERRY
APPROVAL DATE: 09/22/2020
TITLE: GENERAL ARRANGEMENT, SHOE SORTER TAIL, MULTIPLE OAW, 30" OAL
DOCUMENT NUMBER: GA-SHOE-MW-30-0001
REVISION: B
SHEET 1 OF 2

Figure 27-General Arrangement, Shoe Sorter Tail, Sheet 1of 2

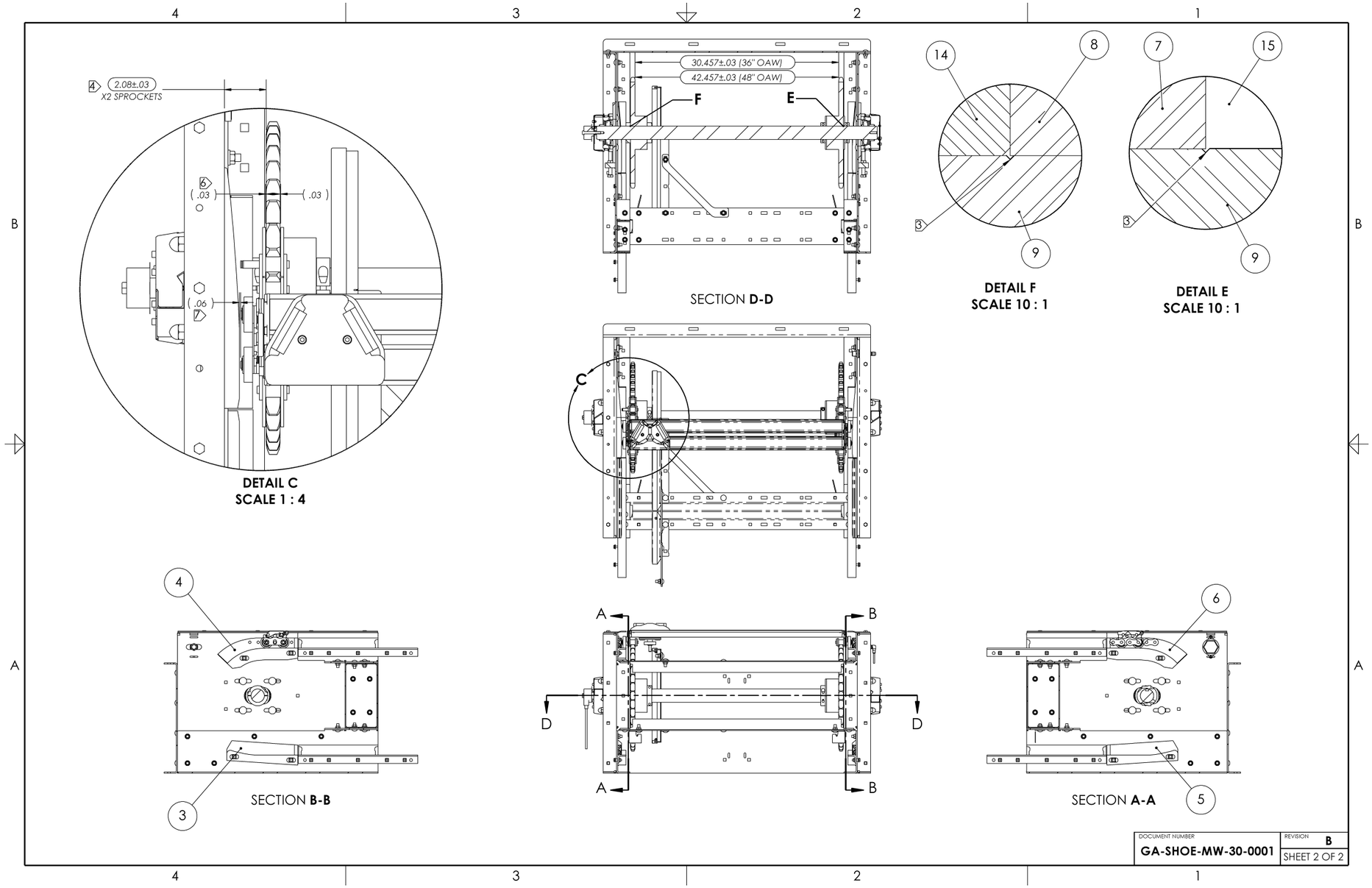

Figure 28-General Arrangement, Shoe Sorter Tail, Sheet 2 of 2

REVISION DESCRIPTION
ORIGINAL DOCUMENT

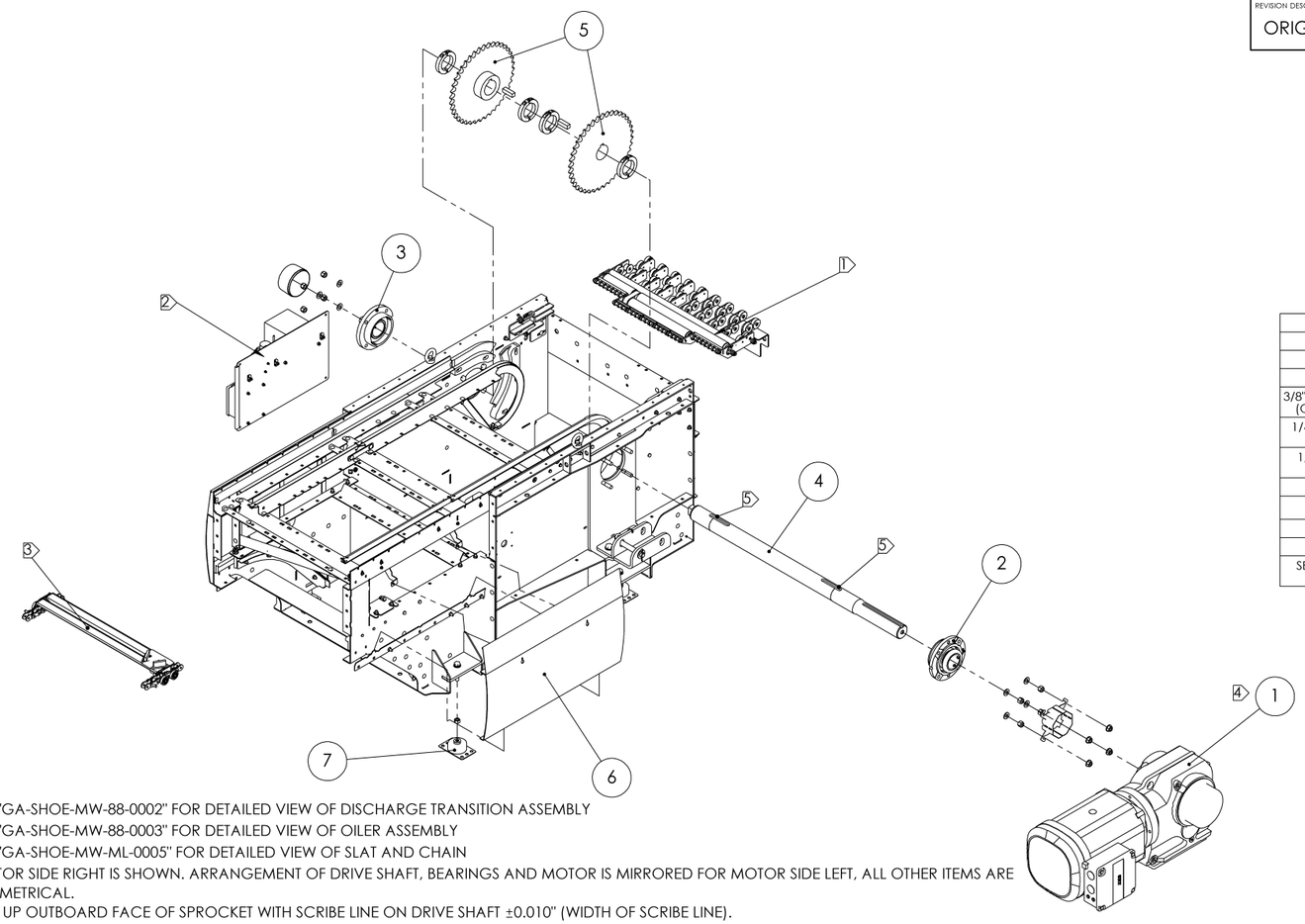

FASTENER	TORQUE (FT-LB)	THREADLOCKER
3/4"-10 HHCS GR5	267	N/A
5/8"-11 HHCS GR5	150	N/A
3/8"-16 HHCS & CB GR5	31	N/A
3/8"-16 HHCS WITH SQUARE NUTS (CLAMPING UHMW PLASTIC)	15	LOCTITE 243
1/4"-20 HHCS GR5 (THREADED INTO UHMW PLASTIC)	4	N/A
1/4"-20 CB GR5 (CLAMPING UHMW PLASTIC)	4	LOCTITE 243
3/4"-16 SET SCREW	179	N/A
1/2"-20 SET SCREW	51	N/A
3/8"-24 SET SCREW	21	N/A
3/8"-24 SHCS ASTM A574	49	N/A
SEE MOTOR MANUFACTURER'S MANUAL FOR TORQUE TO USE ON SHAFT RETAINING BOLT (VARIES BASED ON GEARMOTOR SIZE)		

NOTES:

1. SEE "GA-SHOE-MW-88-0002" FOR DETAILED VIEW OF DISCHARGE TRANSITION ASSEMBLY
2. SEE "GA-SHOE-MW-88-0003" FOR DETAILED VIEW OF OILER ASSEMBLY
3. SEE "GA-SHOE-MW-ML-0005" FOR DETAILED VIEW OF SLAT AND CHAIN
4. MOTOR SIDE RIGHT IS SHOWN. ARRANGEMENT OF DRIVE SHAFT, BEARINGS AND MOTOR IS MIRRORED FOR MOTOR SIDE LEFT, ALL OTHER ITEMS ARE SYMMETRICAL.
5. LINE UP OUTBOARD FACE OF SPROCKET WITH SCRIBE LINE ON DRIVE SHAFT ±0.010" (WIDTH OF SCRIBE LINE).
6. SPROCKET AND SHAFT ARRANGEMENT MUST BE CENTERED IN DRIVE ±0.030" TO AVOID LATERAL FORCES ON CHAIN DUE TO CHAIN GUIDES LEADING INTO DRIVE. USE CALIPERS TO MEASURE BETWEEN SPROCKET FACE AND SIDE OF DRIVE WELDMENT.
7. WITH CHAIN AND SLATS INSTALLED, BOTH CHAINS SHOULD BE RUNNING APPROX. CENTERED ON SPROCKETS TO AVOID EXCESSIVE CHAIN WEAR.
8. CHAIN PINS SHOULD NOT RUB ON CHAIN GUIDE IN RUNNING POSITION. RUBBING INDICATES DRIVE SHAFT AND SPROCKETS ARE NOT CORRECTLY CENTERED.
9. TIGHTEN SQUARING ROD AS NEEDED IF SECTION IS OUT OF SQUARE. SQUARING ROD MAY ALSO BE RELOCATED TO OPPOSITE CORNERS TO PULL IN THE OTHER DIRECTION.
10. CATENARY WARNING SENSOR (RETROREFLECTIVE LASER PHOTOEYE)
11. CATENARY FAULT SENSOR (RETROREFLECTIVE LASER PHOTOEYE)
12. DISCHARGE TRANSITION JAM SENSOR (INDUCTIVE PROXIMITY SENSOR)

Bastian SOLUTIONS
a TOYOTA ADVANCED LOGISTICS company
1821 BASTIAN COURT
WESTFIELD, IN 46074
www.BastianSolutions.com

ORIGINATOR: B. BAKER
CHECKER: S. OSTERHOUT
APPROVER: C. PERRY
APPROVAL DATE: 10/08/2019
TITLE: GENERAL ARRANGEMENT, SHOE SORTER DRIVE SECTION, MULTIPLE OAW, 88IN OAL, 5-40HP GEARMOTOR
DOCUMENT NUMBER: GA-SHOE-MW-88-0001
REVISION: A
SHEET 1 OF 2

Figure 29-General Arrangement, Shoe Sorter Drive, Sheet 1 of 2

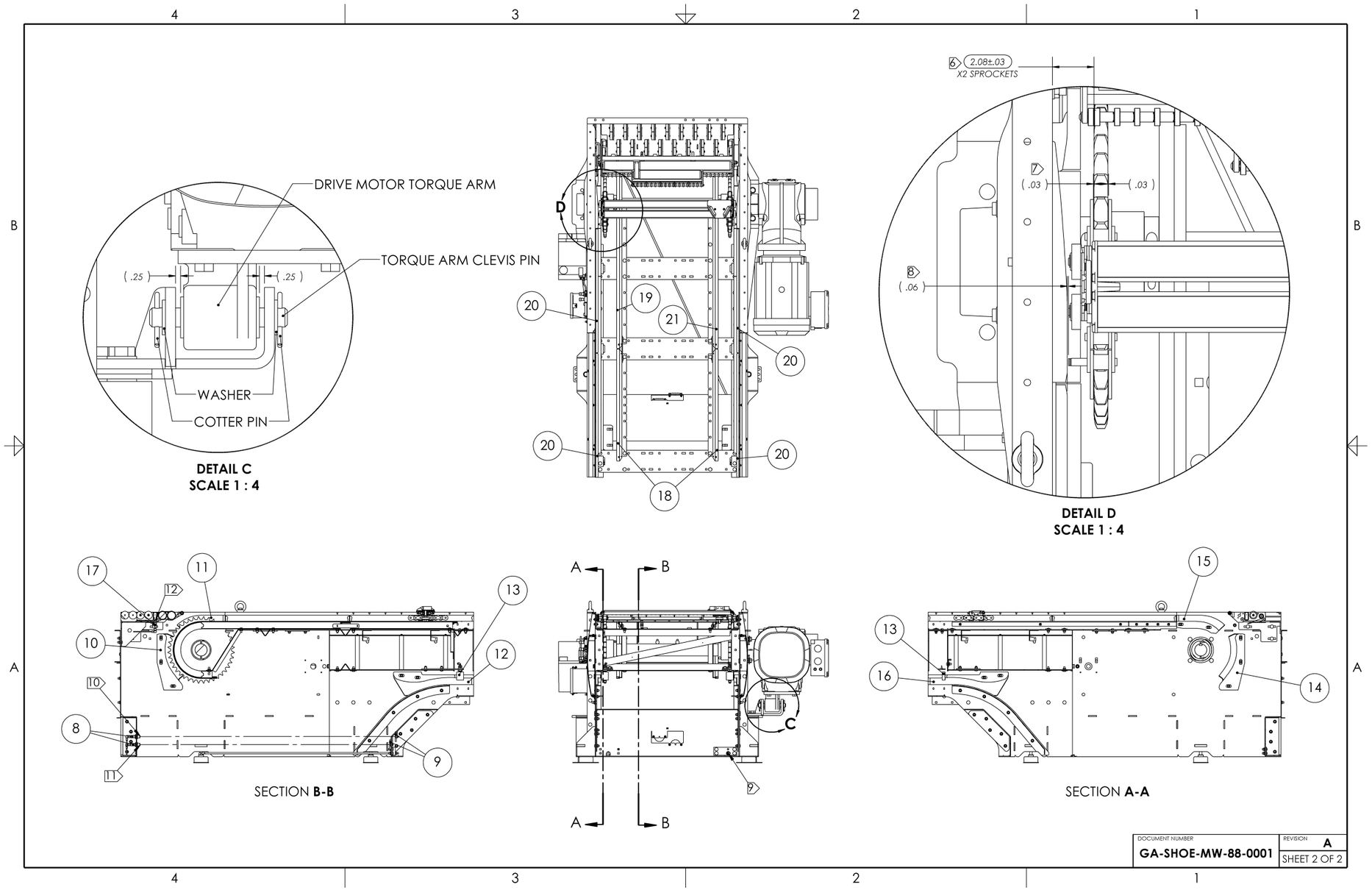

Figure 30-General Arrangement, Shoe Sorter Drive, Sheet 2 of 2

Table 10-BOM for GA-SHOE-MW-88-0001

ITEM NO.	PART NUMBER	QTY	UNITS	DESCRIPTION
1	VARIES	1	EA	SEW EURODRIVE GEARMOTOR, AVAILABLE 5-40 HP, KA67-KA97 GEARBOXES
2	A003BR-10037	1	EA	MOUNTED SPHERICAL ROLLER BEARING, 3in BORE, PILOTED FLANGE, 215 SERIES, SETSCREW LOCKING
3	A003BR-10038	1	EA	MOUNTED BALL BEARING, 3in BORE, PILOTED FLANGE, 216 SERIES, SETSCREW LOCKING
4	VARIES WITH OAW AND MOTOR SELECTION	1	EA	DRIVE SHAFT, 3in DIA
5	A001CP-10093*	2	EA	SPROCKET, LOW RUNOUT, 3" BORE, 40 TEETH, KEYED IN PAIRS
6	Z075SA-15036	2	EA	ASM, SHOE SORTER SIDE COVER, 36in L
7	A003RC-10011	4	EA	VIBRATION DAMPENING MOUNT, 5/8"-11 UNC MOUNT, BOLT DOWN, SEISMIC RATED
8	A002SE-10052	2	EA	PHOTOEYE, RETRO-REFLECTIVE, 0.2m TO 15m SENSING RANGE, PNP, 4 PIN M12 CONNECTOR
9	A002MC-10017	2	EA	REFLECTOR, SMALL CUBE, 48mm HEX
10	Z077SC-10091	1	EA	CHAIN LEAD-IN BLOCK, SHOE SORTER DRIVE MODULE, STYLE B
11	Z077SC-10089	1	EA	TOP CHAIN GUIDE BLOCK, SHOE SORTER DRIVE MODULE, STYLE B
12	Z077SC-10087	1	EA	INFEED GUIDE BLOCK, SHOE SORTER CATENARY MODULE, STYLE B
13	A013LS-10001	2	EA	CHAIN OIL BRUSH, 1/8" NPT MALE, 2in W, 1.25in BRISTLE L, STYLE D
14	Z077SC-10090	1	EA	CHAIN LEAD-IN BLOCK, SHOE SORTER DRIVE MODULE, STYLE A
15	Z077SC-10088	1	EA	TOP CHAIN GUIDE BLOCK, SHOE SORTER DRIVE MODULE, STYLE A
16	Z077SC-10086	1	EA	INFEED GUIDE BLOCK, SHOE SORTER CATENARY MODULE, STYLE A
17	A002SE-10024	1	EA	PROX, M12 X 1 FLUSH MOUNT TO 3 PIN M12 CONNECTOR, 60mm L, 4mm SENSING RANGE, PNP, NORAMALLY OPEN, 2 LOCK NUTS
18	A012SP-10028	2	EA	PIN GUIDE EXTRUSION, SHOE SORTER, 27.875in L

ITEM NO.	PART NUMBER	QTY	UNITS	DESCRIPTION
19	A012SP-10061	1	EA	PIN GUIDE EXTRUSION, CURVED DISCHARGE, SHOE SORTER, STYLE A
20	A012SC-10031	4	EA	CHAIN GUIDE EXTRUSION, SHOE SORTER, 30.875in L
21	A012SP-10062	1	EA	PIN GUIDE EXTRUSION, CURVED DISCHARGE, SHOE SORTER, STYLE B

*Note the sprockets are keyed in pairs and must be replaced as a matched set. Worn sprockets may be swapped with each other to use the unworn side of the sprocket tooth and thereby extend the useful lifespan.

REVISION DESCRIPTION
ORIGINAL DOCUMENT

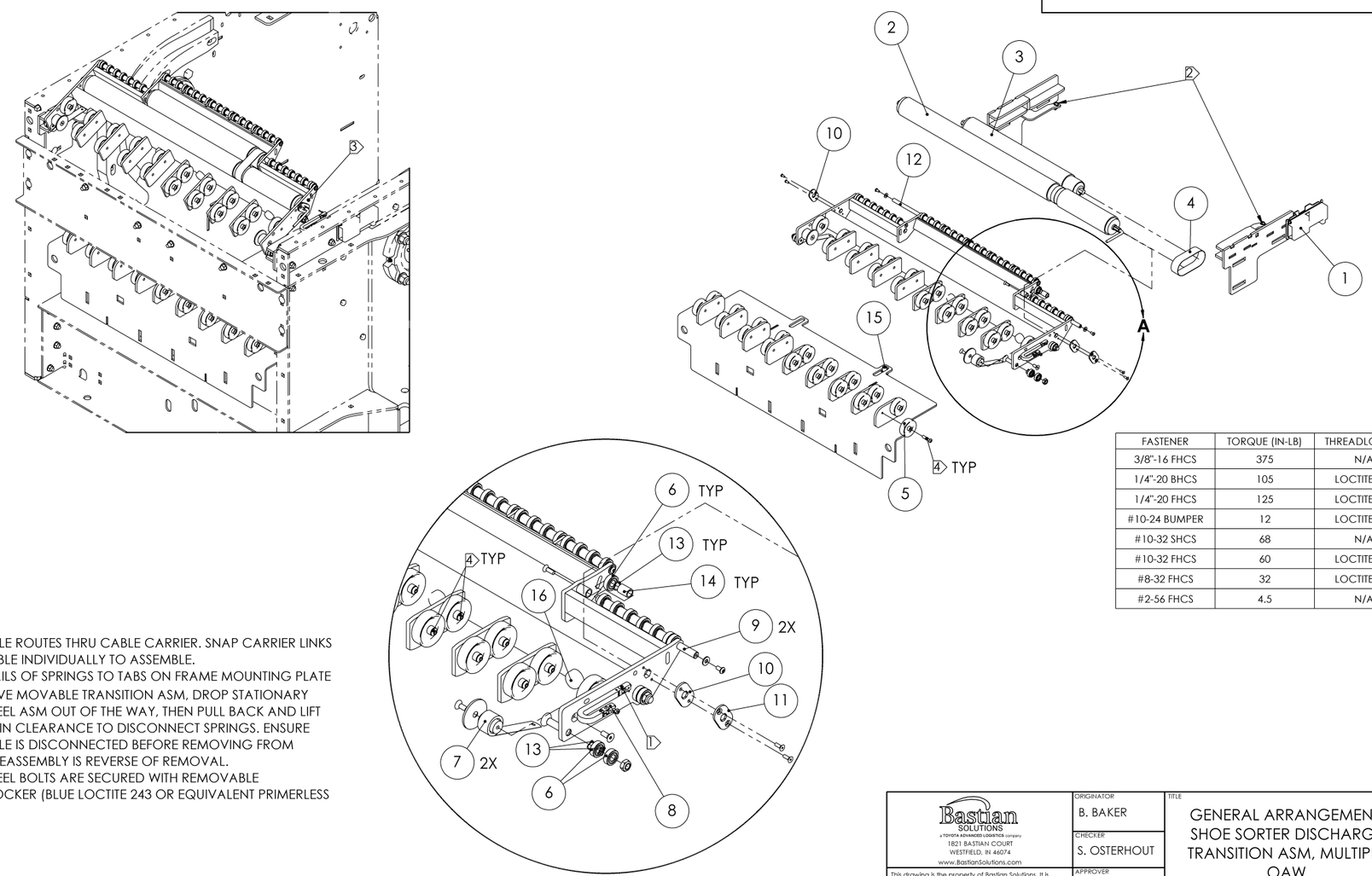

FASTENER	TORQUE (IN-LB)	THREADLOCKER
3/8"-16 FHCS	375	N/A
1/4"-20 BHCS	105	LOCTITE 243
1/4"-20 FHCS	125	LOCTITE 243
#10-24 BUMPER	12	LOCTITE 243
#10-32 SHCS	68	N/A
#10-32 FHCS	60	LOCTITE 243
#8-32 FHCS	32	LOCTITE 243
#2-56 FHCS	4.5	N/A

NOTES:

1. MDR CABLE ROUTES THRU CABLE CARRIER. SNAP CARRIER LINKS OVER CABLE INDIVIDUALLY TO ASSEMBLE.
2. FASTEN TAILS OF SPRINGS TO TABS ON FRAME MOUNTING PLATE
3. TO REMOVE MOVABLE TRANSITION ASM, DROP STATIONARY SKATEWHEEL ASM OUT OF THE WAY, THEN PULL BACK AND LIFT UP TO GAIN CLEARANCE TO DISCONNECT SPRINGS. ENSURE MDR CABLE IS DISCONNECTED BEFORE REMOVING FROM SORTER. REASSEMBLY IS REVERSE OF REMOVAL.
4. SKATEWHEEL BOLTS ARE SECURED WITH REMOVABLE THREADLOCKER (BLUE LOCTITE 243 OR EQUIVALENT PRIMERLESS GRADE)

Bastian SOLUTIONS
a TOYOTA ADVANCED LOGISTICS company
1821 BASTIAN COURT
WESTFIELD, IN 46074
www.BastianSolutions.com

ORIGINATOR: B. BAKER
CHECKER: S. OSTERHOUT
APPROVER: C. PERRY
APPROVAL DATE: 10/08/2019

TITLE: GENERAL ARRANGEMENT, SHOE SORTER DISCHARGE TRANSITION ASM, MULTIPLE OAW

DOCUMENT NUMBER: GA-SHOE-MW-88-0002
REVISION: A
SHEET 1 OF 1

Figure 31-General Arrangement, Shoe Sorter Discharge Transition, Sheet 1 of 1

Table 11-BOM for GA-SHOE-MW-88-0002

ITEM NO.	PART NUMBER		QTY		UNITS	DESCRIPTION
	36” OAW	48” OAW	36” OAW	48” OAW		
1	A002DC-10016		1		EA	MDR CARD, EZ-24, 9 PIN MOTOR CONNECTOR
2	Z075SA-16055	Z075SA-16102	1		EA	ASM, MDR W/ ROLLER SLEEVE, PUSHBACK SLED
3	Z075SA-16056	Z075SA-16103	1		EA	ASM, ROLLER W/ ROLLER SLEEVE, PUSHBACK SLED
4	A001BA-10037		1		EA	BELT, FLAT 83A URETHANE, 1" WIDE X .031" THICK
5	A005SK-10001		36	48	EA	SKATEWHEEL, 1.938in OD, 0.25in BORE
6	A003BR-10002		44	60	EA	BALL BEARING, R6-2RS
7	A003SG-10010		2		EA	CONSTANT FORCE SPRING, 39" L, 0.88in ID, 1.19in OD, 6lb LOAD, 3000 CYCLES
8	A002EW-10022		1		EA	CABLE CARRIER, 0.2in INNER WIDTH, 12 LINKS WITH ENDS
9	Z077SC-10092		2		EA	BEARING SHAFT, 3/8" OD, 7.5in L, TG&P STEEL
10	Z077SC-10070		2		EA	INNER BRACKET, PUSHBACK SLED FRAME MDR MOUNT
11	Z077SC-10071		1		EA	OUTER BRACKET, PUSHBACK SLED FRAME MDR MOUNT
12	Z077SC-10085	Z077SC-10219	1		EA	BEARING SHAFT, 3/8" OD, TG&P STEEL
13	A003SG-00005		44	61	EA	TRIPLE WAVE WASHER, STEEL, 3/8” ID, 0.5in OD
14	A003UP-10018		29	38	EA	ALUM SPACER, 3/8" X 11/16"L, 0.5in OD
15	A002SE-10024		1		EA	PROX, M12 X 1 FLUSH MOUNT TO 3 PIN M12 CONNECTOR, 60mm L, 4mm SENSING RANGE, PNP, NORAMALLY OPEN, 2 LOCK NUTS
16	A003RC-10004		4		EA	RUBBER BUMPER, #10-24, 0.38in THREAD DEPTH, ROUND, SBR RUBBER

ITEM NO.	PART NUMBER	QTY	UNITS	DESCRIPTION
1	A016VA-10001	3	ea	NEEDLE VALVE, 1/8" NPT FEMALE TO 1/8" NPT FEMALE, FINE ADJUSTMENT, BRASS
2	A016FT-10001	2	ea	FLOW SIGHT INDICATOR, 1/8" NPT FEMALE TO 1/8" NPT FEMALE
3	A013LS-10002	1	ea	OILER PUMP, 6L RESERVOIR, 24VDC
4	A012PL-10058	1	ea	EDGE PROTECTOR, UHMW EXTRUSION, SHOE SORTER OILER
5	A002EP-10012	1	ea	ELECTRICAL ENCLOSURE, 6" x 6" BOX, 4in DEPTH, OIL RESISTANT
7	A016TU-10003	25	ft	TUBE, 95A URETHANE, 1/4" OD, 1/8" ID, CLEAR
8	A013LS-10001	2	ea	CHAIN OIL BRUSH, 1/8" NPT MALE, 2in W, 1.25in BRISTLE L, STYLE D
9	A016VA-10040	2	ea	CHECK VALVE, 1/8" NPT MALE TO 1/8" NPT FEMALE, BRASS
10	A016TU-10005	1	ea	HOSE, 3/16" ID, 5/16" OD, 18in L, 1/8" MALE NPT SWIVEL TO 1/8" MALE NPT SWIVEL, 3000 PSI, SAE 100R14, PTFE LINER, 304 SS BRAID, BRASS FITTINGS, 2in BEND RADIUS
11	A021LU-10001	1	gal	GEAR OIL, MINERAL BASE, SAE 85W, ISO 100, 1 GALLON JUG

REVISION DESCRIPTION
REV B

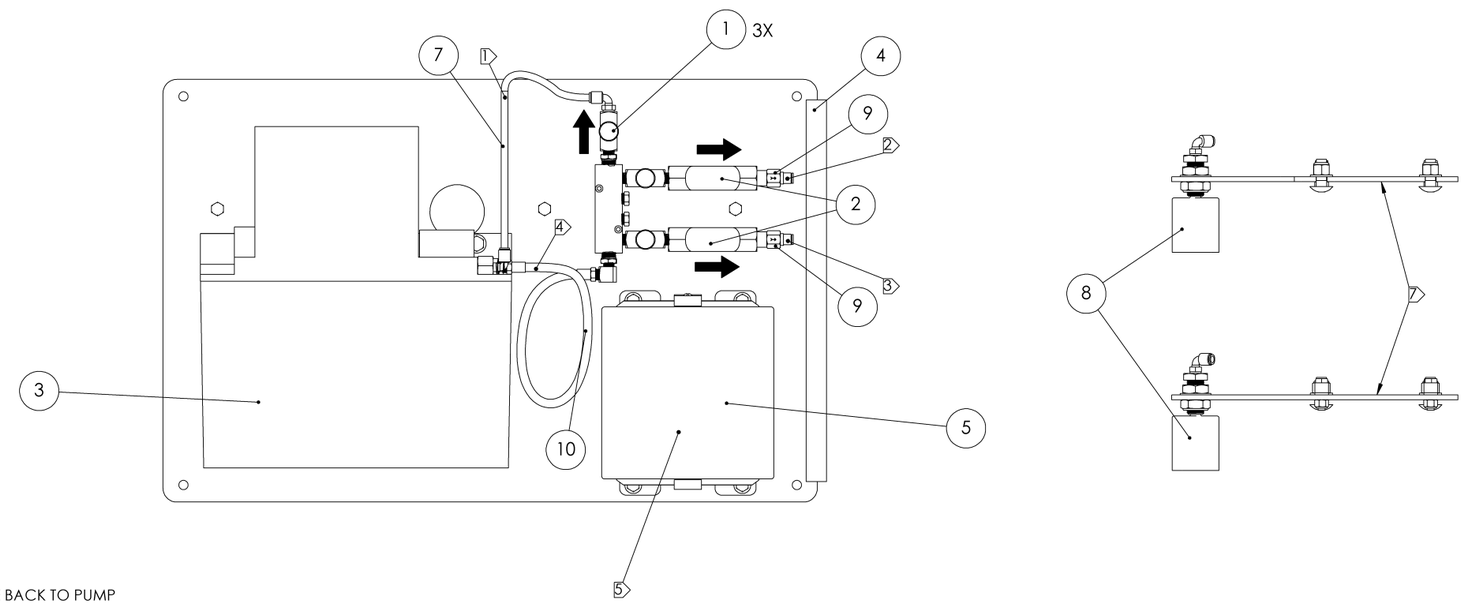

NOTES:

1. RETURN LINE BACK TO PUMP
2. OUTPUT LINE TO RIGHT SIDE BRUSH
3. OUTPUT LINE TO LEFT SIDE BRUSH
4. SUPPLY LINE FROM PUMP TO MANIFOLD
5. OILER PUMP REQUIRES RELAY IN TYPICAL INSTALLATION. ELECTRICAL ENCLOSURE IS PROVIDED, BUT ELECTRICAL WIRING DETAILS ARE BY OTHERS AND MAY VARY PER INSTALLATION.
6. OILER CAN BE MOUNTED REMOTE FROM SORTER IF DESIRED FOR ACCESSIBILITY. CONTACT BSC IF ADDITIONAL OIL TUBING IS NEEDED FOR REMOTE INSTALLATION.
7. CHAIN OIL BRUSHES SHOWN FOR REFERENCE. BRUSHES ARE MOUNTED IN CATENARY SECTION. SEE GA-SHOE-MW-88-0001 FOR OIL BRUSH MOUNTING DETAILS.
8. ITEM (11) IS NOT SHOWN. OILER SHIPS WITH 1 GALLON OF OIL FOR COMMISSIONING AND INITIAL OPERATION. REFILL AS NEEDED.

Bastian SOLUTIONS
a TOYOTA ADVANCED LOGISTICS company
1821 BASTIAN COURT
WESTFIELD, IN 46074
www.BastianSolutions.com

ORIGINATOR: B. BAKER
CHECKER: B. ROUTT
APPROVER: C. PERRY
APPROVAL DATE: 10/13/2020
TITLE: GENERAL ARRANGEMENT, SHOE SORTER OILER ASM, MULTIPLE OAW
DOCUMENT NUMBER: GA-SHOE-MW-88-0003
REVISION: B
SHEET 1 OF 1

Figure 32-General Arrangement, Shoe Sorter Oiler, Sheet 1 of 1

ITEM NO.	PART NUMBER	QTY	UNITS	DESCRIPTION
1	Z075SA-12120	1	EA	ASM, SHOE SORTER SIDE PANEL, 120in OAL, STYLE A
2	Z075SA-13120	1	EA	ASM, SHOE SORTER SIDE PANEL, 120in OAL, STYLE B

REVISION DESCRIPTION
ORIGINAL DOCUMENT

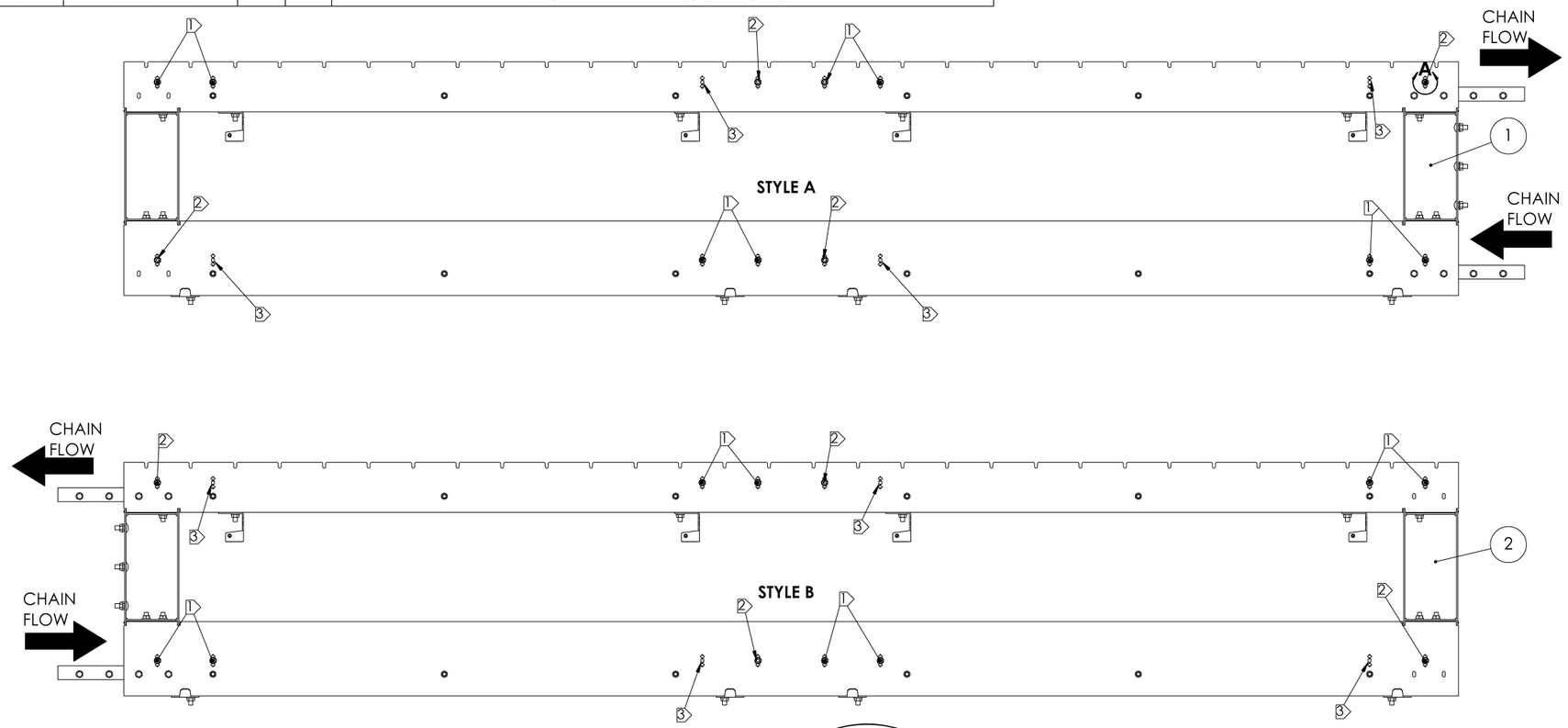

NOTES:

1. THESE BOLTS ARE FULLY TIGHTENED (APPROX. 4 FT-LB) AND SECURED WITH LOCTITE 243
2. THESE BOLTS ARE SNUG (FINGER TIGHT) ONLY AND SECURED WITH LOCTITE 243
3. THESE ARE EMPTY HOLES WITH NO BOLTS
4. CENTER HOLE IS OCCUPIED WITH BOLT. TOP AND BOTTOM HOLES DO NOT HAVE BOLTS.

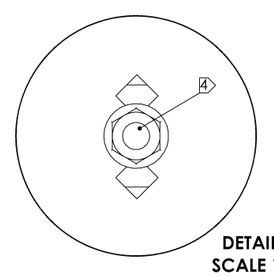

DETAIL A
SCALE 1 : 1
TYP.

Bastian SOLUTIONS
a TOYOTA ADVANCED LOGISTICS company
1821 BASTIAN COURT
WESTFIELD, IN 46074
www.BastianSolutions.com

ORIGINATOR: B. BAKER
CHECKER: S. OSTERHOUT
APPROVER: C. PERRY
APPROVAL DATE: 10/09/2019

TITLE: GENERAL ARRANGEMENT, SHOE SORTER SECTION SIDE PANELS, CHAIN GUIDE FASTENING DETAIL, MULTIPLE OAW, 120IN OAL

DOCUMENT NUMBER: GA-SHOE-MW-120-0001
REVISION: A
SHEET 1 OF 1

Figure 33-General Arrangement, Shoe Sorter Chain Guide Fastening Detail, Sheet 1 of 1

REVISION DESCRIPTION
ORIGINAL DOCUMENT

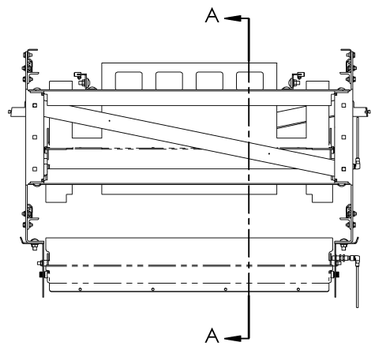

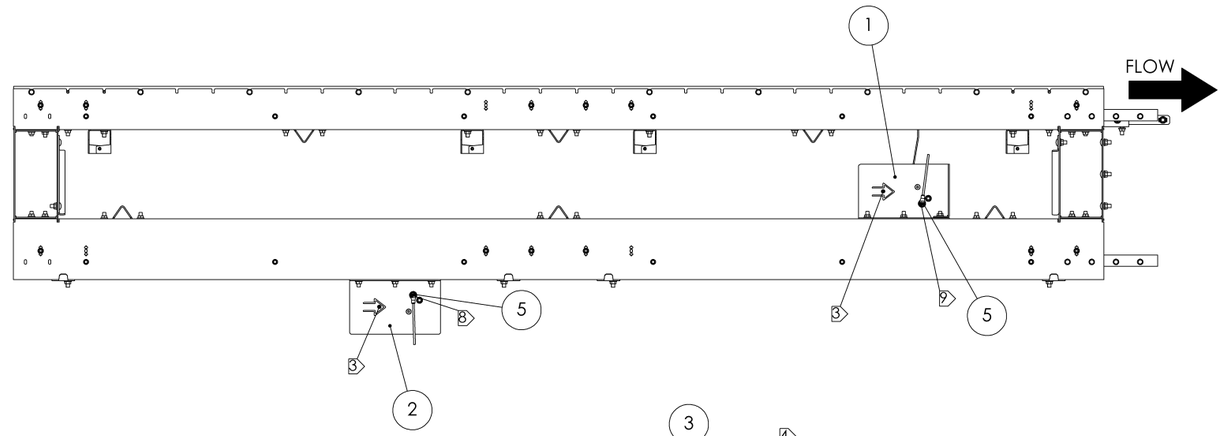

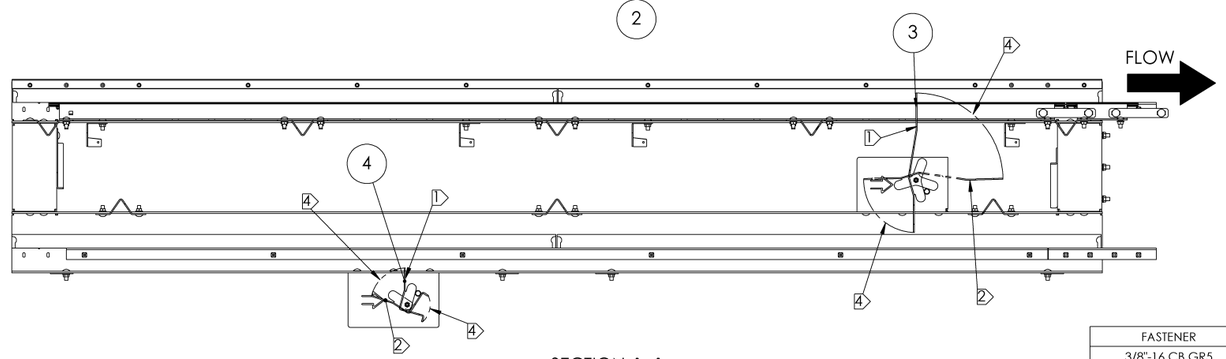

SECTION **A-A**

FASTENER	TORQUE (FT-LB)	THREADLOCKER
3/8"-16 CB GR5	31	N/A
1/4"-20 CB GR5 (CLAMPING UHMW PLASTIC)	4	LOCTITE 243
1/4"-20 HHCS GR5	8	N/A

NOTES:

1. SENSOR GATE IN "SET" STATE (SORTER IS READY TO RUN).
2. SENSOR GATE IN "TRIPPED" STATE (SORTER WILL NOT RUN). SHOWN FOR REFERENCE (ONLY 1 GATE IS MOUNTED PER SENSOR ASM)
3. ARROW ON SENSOR ASM MOUNT POINTS IN DIRECTION OF SORTER FLOW
4. ENSURE SENSOR GATE PIVOTS FREELY AND ARC OF MOTION IS CLEAR OF OBSTACLES (E.G. BED SPACERS)
5. SEE SYSTEM LAYOUT DRAWING FOR SENSOR LOCATIONS. SENSOR ASSEMBLIES MAY BE LOCATED IN ANY POSITION THAT ALLOWS FOR UNOBSTRUCTED MOVEMENT OF SENSOR GATE.
6. TYPICAL LOCATIONS FOR UNDERNEATH SENSORS: (2) PER SORTER, (1) APPROX. 20FT DOWNSTREAM OF TAIL, AND (1) IMMEDIATELY UPSTREAM OF CATENARY SECTION.
7. TYPICAL LOCATIONS FOR INTERNAL SENSORS: APPROX. (1) SENSOR EVERY 50FT OF SORTER (AS EVENLY SPACED AS PRACTICAL), LOCATED IN INTERMEDIATE BEDS.
8. PROXIMITY SENSOR FOR UNDERNEATH SENSOR
9. PROXIMITY SENSOR FOR INTERNAL SENSOR

Bastian SOLUTIONS
a TOYOTA ADVANCED LOGISTICS company
1821 BASTIAN COURT
WESTFIELD, IN 46074
www.BastianSolutions.com

ORIGINATOR: B. BAKER
CHECKER: S. OSTERHOUT
APPROVER: C. PERRY
APPROVAL DATE: 10/10/2019
TITLE: GENERAL ARRANGEMENT, SHOE SORTER DEBRIS SENSOR DETAIL, MULTIPLE OAW, 120IN OAL
DOCUMENT NUMBER: **GA-SHOE-MW-120-0002**
REVISION: **A**
SHEET 1 OF 1

Figure 34-General Arrangement, Shoe Sorter Debris Sensor Detail, Sheet 1 of 1

Table 12-BOM for GA-SHOE-MW-120-0002

ITEM NO.	PART NUMBER		QTY	UNITS	DESCRIPTION
	36” OAW	48” OAW			
1	Z075SA-16039	Z075SA-16106	VARIES*	EA	ASM, SHOE SORTER, INSIDE SLAT SENSOR
2	Z075SA-16038	Z075SA-16105	VARIES (2 TYP.)*	EA	ASM, SHOE SORTER, UNDERNEATH SLAT SENSOR
3	Z077SC-10133	Z077SC-10135	1**	EA	BRACKET, SHOE SORTER, INSIDE TRIP GATE
4	Z077SC-10132	Z077SC-10134	1**	EA	BRACKET, SHOE SORTER, TRIP GATE
5	A002SE-10024		1**	EA	PROX, M12 X 1 FLUSH MOUNT TO 3 PIN M12 CONNECTOR, 60mm L, 4mm SENSING RANGE, PNP, NORAMALLY OPEN, 2 LOCK NUTS

*See the system layout drawing for the number and location of internal and underside sensor gates.

**Quantities are per sensor gate assembly.

REVISION DESCRIPTION
ORIGINAL DOCUMENT

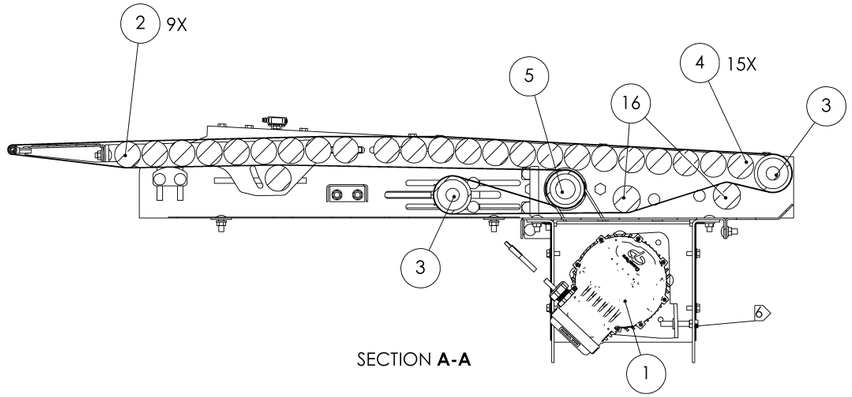

SECTION **A-A**

FASTENER	TORQUE (FT-LB)	TORQUE (IN-LB)	THREADLOCKER
1/2"-13 HHCS GR5	64	768	N/A
3/8"-16 HHCS & CB GR5	26	312	N/A
5/16"-18 HHCS GR5	14	168	N/A
5/16"-18 FHCS ASTM F835	18	216	LOCTITE 243
5/16"-18 SHOULDER BOLT	10	120	LOCTITE 243
1/4"-20 X 3/8"L SET SCREW	6.5	78	N/A
1/4"-20 X 3/16"L SET SCREW	4	48	N/A
1108 TL BUSHING SCREW	4.6	55	N/A
#10-32 CB 18-8 SS	2.5	30	N/A

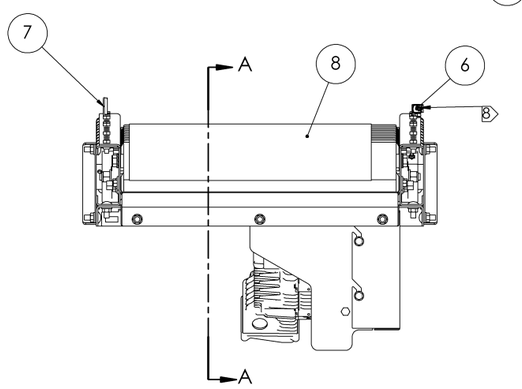

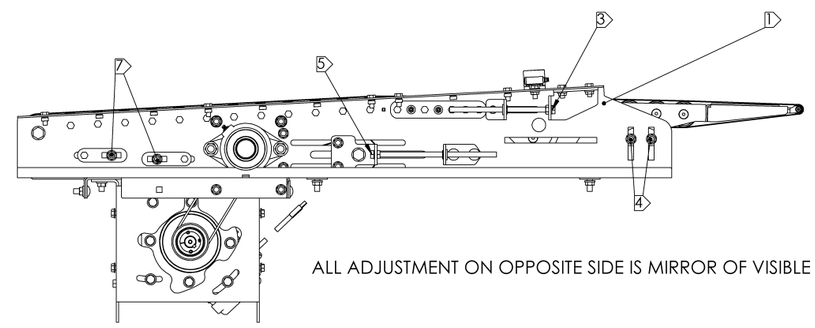

ALL ADJUSTMENT ON OPPOSITE SIDE IS MIRROR OF VISIBLE SIDE

NOTES:

1. GUARDS AND COVERS HIDDEN IN THIS VIEW FOR CLARITY
2. CORRECT BELT STRETCH IS 7%. TO MEASURE TENSION, MAKE (2) MARKS 24" APART ON CENTERLINE OF NEW BELT BEFORE INSTALLING, AND TENSION BELT UNTIL DISTANCE BETWEEN MARKS IS 25 5/8". WHEN REUSING OLD BELT, MAKE (2) MARKS 25 5/8" APART ON CENTERLINE OF OLD BELT BEFORE RELAXING TENSION. RETENSION BACK TO SAME MEASUREMENT WHEN REINSTALLING. BELT WILL NOT RELAX COMPLETELY SO FOLLOWING PROCEDURE FOR NEW BELT WILL OVERSTRETCH OLD BELT.
3. KNIFE EDGE HORIZONTAL ADJUSTMENT. SET RIGHT AND LEFT SIDES TO SAME DISTANCE.
4. KNIFE EDGE VERTICAL ADJUSTMENT. SET RIGHT AND LEFT SIDES TO SAME HEIGHT. IF TRACKING IS DIFFICULT, VERTICAL ADJUSTMENT MAY BE SLIGHTLY ADJUSTED TO CORRECT (USE ONLY IF SNUB ROLLERS ARE NOT SUFFICIENT).
5. BELT TENSION ADJUSTMENT. TENSION BELT AS SPECIFIED AFTER KNIFE EDGE POSITION IS SET. RELAX BELT TENSION BEFORE MOVING KNIFE EDGE TO AVOID OVERSTRETCHING BELT.
6. DRIVE BELT TENSIONER. WITH MOTOR BOLTS LOOSE, TORQUE TO 2 IN-LB, TO APPLY APPROXIMATELY 25LB TENSION TO TIMING BELT, THEN TORQUE MOTOR BOLTS TO SPECIFIED VALUE.
7. SNUB ROLLER ADJUSTMENT
8. SORTER INDUCTION/METERING PHOTOEYE

Bastian SOLUTIONS
a TOYOTA ADVANCED LOGISTICS company
1821 BASTIAN COURT
WESTFIELD, IN 46074
www.BastianSolutions.com

ORIGINATOR: B. BAKER
CHECKER: S. OSTERHOUT
APPROVER: C. PERRY
APPROVAL DATE: 10/21/2019
TITLE: GENERAL ARRANGEMENT, SHOE SORTER KNIFE EDGE INDUCTION CONVEYOR, MULTIPLE OAW, 48" OAL
DOCUMENT NUMBER: **GA-SHOE-MW-48-0001**
REVISION: **A**
SHEET 1 OF 2

Figure 35-General Arrangement, Shoe Sorter Knife Edge, Sheet 1 of 2

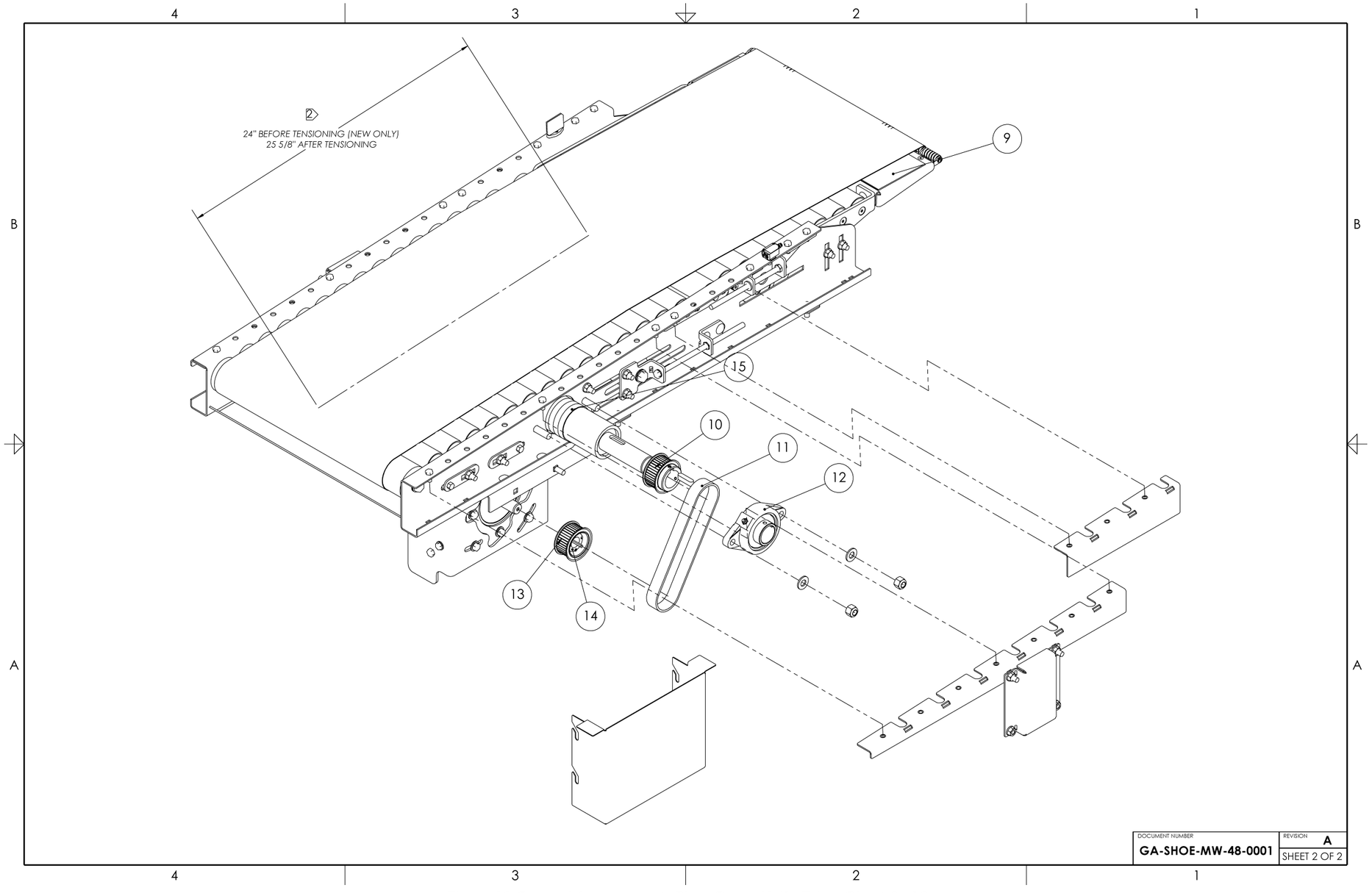

Figure 36-General Arrangement, Shoe Sorter Knife Edge, Sheet 2 of 2

Table 13-BOM for GA-SHOE-MW-48-0001

ITEM NO.	PART NUMBER		QTY	UNITS	DESCRIPTION
	24” OAW	36” OAW			
1	A013TM-10010		1	EA	AC SERVO MOTOR, TEKNIC MCVC-N1433P, NEMA 143
2	A001RL-10183	A001RL-10231	9	EA	ROLLER, 1.9in OD, NO GRV, 5/16"-18 FEMALE THREADED SHAFT, ABEC-1
3	A001RL-10175	A001RL-10229	2	EA	ROLLER, 2.75in OD, NO GRV, 1/2"-13 FEMALE THREADED SHAFT, ABEC-1
4	A001RL-10041	A001RL-10058	15	EA	ROLLER, 1.9in OD, NO GRV, 7/16" HEX, ABEC-1
5	A001CP-10096	A001CP-10112	1	EA	PULLEY, 2.75in OD, 1.438in WELDED STUB SHAFT, BLIND KEYWAY 1 END
6	A002SE-10025		1	EA	PHOTOEYE, RETRO-REFLECTIVE, 0.05m TO 5m SENSING RANGE, PNP, 4 PIN M8 CONNECTOR
7	A002MC-10006		1	EA	REFLECTOR, 10-24 THREAD
8	A001CB-10192	A001CB-10203	1	EA	BELT, MAB, 133.125in L, 7% STRETCH, ENDLESS WELDED
9	Z075SA-16045	Z075SA-16092	1	EA	ASM, SHOE SORTER KNIFE EDGE NOSE BAR
10	A001CP-10094		1	EA	SPROCKET, GT3, 5mm PITCH, 40 TOOTH, 25mm W, 1.438in ID, KEYED
11	A001TB-10024		1	EA	TIMING BELT, 600mm L x 25mm W, GT3, 5mm PITCH
12	A003BR-10040		2	EA	MOUNTED BEARING, 1.438in ID, 2 BOLT FLANGE, SERIES 207
13	A001CP-10095		1	EA	SPROCKET, GT3, 5mm PITCH, 40 TOOTH, 25mm W, 1108 TAPER-LOCK BORE
14	A003BU-10009		1	EA	BUSHING, TAPER-LOCK, 1108, 0.875in ID, KEYED
15	A001BA-10038		8	EA	TRACKING BAND, 0.500 WIDE X 0.062 THICK, 7.317 LOOP LENGTH
16	A001RL-10184	A001RL-10228	2	EA	ROLLER, 2.0in OD, NO GRV, 7/16" HEX, ABEC-1, PRECISION

ITEM NO.	PART NUMBER		QTY	UNITS	DESCRIPTION
	24" OAW	36" OAW			
1	A001CP-10096	xxx	1	EA	PULLEY, 2.75in OD, 1.438in WELDED STUB SHAFT, BLIND KEYWAY 1 END
2	A001CP-10094		1	EA	SPROCKET, GT3, 5mm PITCH, 40 TOOTH, 25mm W, 1.438in ID, KEYED
3	A001BA-10038		8	EA	TRACKING BAND, 0.500 WIDE X 0.062 THICK, 7.317 LOOP LENGTH
4	A001TB-10025		1	EA	TIMING BELT, 700mm L x 25mm W, GT3, 5mm PITCH
5	A003BR-10041		2	EA	MOUNTED BEARING, 1.438in ID, 3 BOLT FLANGE BRACKET, SERIES 207
6	A001RL-10175	xxx	1	EA	ROLLER, 2.75in OD, NO GRV, 1/2"-13 FEMALE THREADED SHAFT, ABEC-1
7	A001CB-10193		1	EA	BELT, MAB, 17.75in W, 136.25in L, 7% STRETCH, ENDLESS WELDED
8	A001RL-10041	A001RL-10058	17	EA	ROLLER, 1.9in OD, NO GRV, 7/16" HEX, ABEC-1
9	A013TM-10010		1	EA	AC SERVO MOTOR, TEKNIC MCVC-N1433P, NEMA 143
10	A001CP-10095		1	EA	SPROCKET, GT3, 5mm PITCH, 40 TOOTH, 25mm W, 1108 TAPER-LOCK BORE
11	A003BU-10009		1	EA	BUSHING, TAPER-LOCK, 1108, 0.875in ID, KEYED
12	A001RL-10184	xxx	2	EA	ROLLER, 2.0in OD, NO GRV, 7/16" HEX, ABEC-1, PRECISION

REVISION DESCRIPTION
ORIGINAL DOCUMENT

FASTENER	TORQUE (FT-LB)	TORQUE (IN-LB)	THREADLOCKER
1/2"-13 HHCS GR5	64	768	N/A
3/8"-16 HHCS & CB GR5	26	312	N/A
7/16"-14 FHCS	50	600	N/A
1/4"-20 X 3/8"L SET SCREW	6.5	78	N/A
1/4"-20 X 3/16"L SET SCREW	4	48	N/A
1108 TL BUSHING SCREW	4.6	55	N/A
#10-32 CB 18-8 SS	2.5	30	N/A

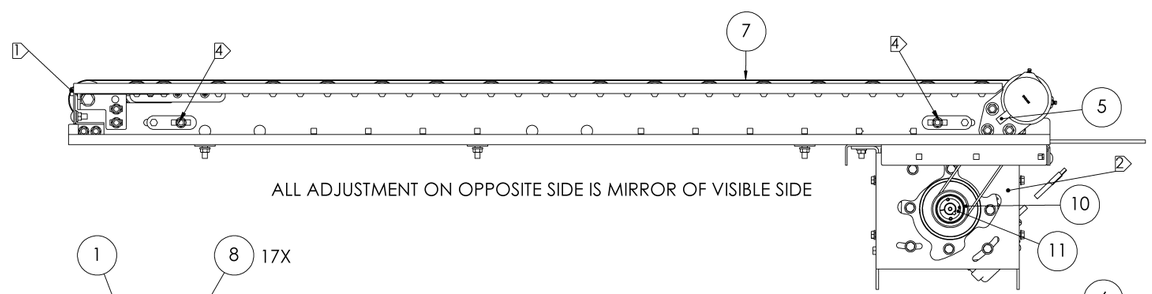

ALL ADJUSTMENT ON OPPOSITE SIDE IS MIRROR OF VISIBLE SIDE

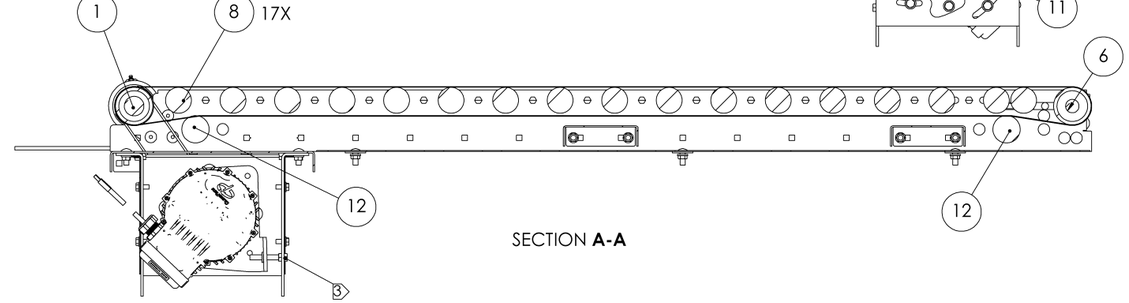

SECTION **A-A**

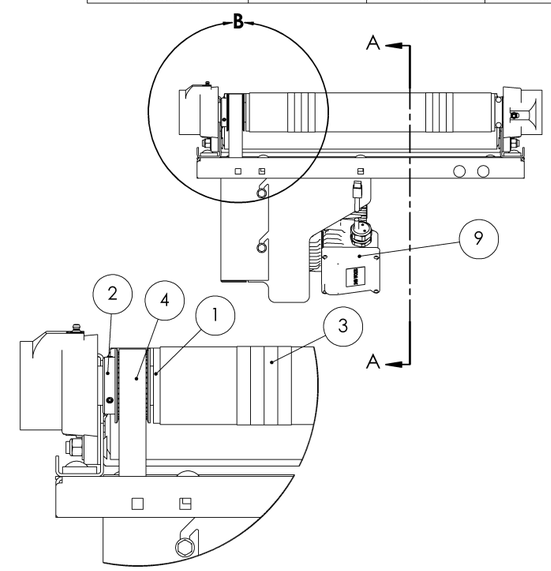

DETAIL B
SCALE 1 : 4

NOTES:

1. BELT TENSIONER IS USED FOR INSTALLING BELT ONLY, NOT FOR TRACKING ADJUSTMENT. BOTH SIDES MUST BE BOTTOMED OUT AND PULLEY MUST BE INSTALLED SQUARE TO FRAME.
2. GUARD HIDDEN IN THIS VIEW FOR CLARITY.
3. DRIVE BELT TENSIONER. WITH MOTOR BOLTS LOOSE, TORQUE TO 2 IN-LB, TO APPLY APPROX. 25LB TENSION TO TIMING BELT, THEN TORQUE MOTOR BOLTS TO SPECIFIED VALUE.
4. SNUB ROLLER ADJUSTMENT

Bastian SOLUTIONS
a TOYOTA ADVANCED LOGISTICS company
1821 BASTIAN COURT
WESTFIELD, IN 46074
www.BastianSolutions.com

ORIGINATOR: B. BAKER
CHECKER: S. OSTERHOUT
APPROVER: C. PERRY
APPROVAL DATE: 10/21/2019
TITLE: GENERAL ARRANGEMENT, SHOE SORTER INDUCTION GAPPER, MULTIPLE OAW, 72" OAL
DOCUMENT NUMBER: **GA-SHOE-MW-72-0001**
REVISION: **A**
SHEET 1 OF 1

Figure 37-General Arrangement, Shoe Sorter Induction Gapper, Sheet 1 of 1

Appendix 4 Electrical Schematics for Divert Control Box

COMPANY NAME
CITY, STATE
CONVEYOR SYSTEM
BAE SORTER DRAWINGS

SHEET	TITLE LINE 1	TITLE LINE 2	TITLE LINE 3
100	SORTER	TITLE PAGE	TABLE OF CONTENTS
101	SORTER	ENCLOSURE LAYOUT	BACK PANEL LAYOUT
102	SORTER	480VAC/24VDC	POWER WIRING
104	SORTER	CONTROL WIRING	I/O WIRING
105	SORTER	CONTROL WIRING	CONNECTOR'S
106	SORTER	CONTROL WIRING	CONNECTOR'S
119	SORTER	PANEL BILL OF MATERIAL	

CUSTOMER: BAE SORTER BOX
PROJECT: XX-XXXXX
TYPE: ELECTRICAL SCHEMATICS
TITLE: SORTER
TITLE PAGE
TABLE OF CONTENTS
DATE: 07-11-17
DRAWING NAME: BAE SORT 100
SHEET: 100 OF 119

Bastian AUTOMATION ENGINEERING
www.bastiansolutions.com

REVISION 1
DRAWN BY TSM
DATE 2/13/17
CHECKED BY
DATE
SIZE B
SCALE 1"=1'

4
3
2
1 AS BUILT
0 ORIGINAL DESIGN-COMPLETED

Figure 38-Electrical Schematic for Divert Control Box, Sheet 1 of 7

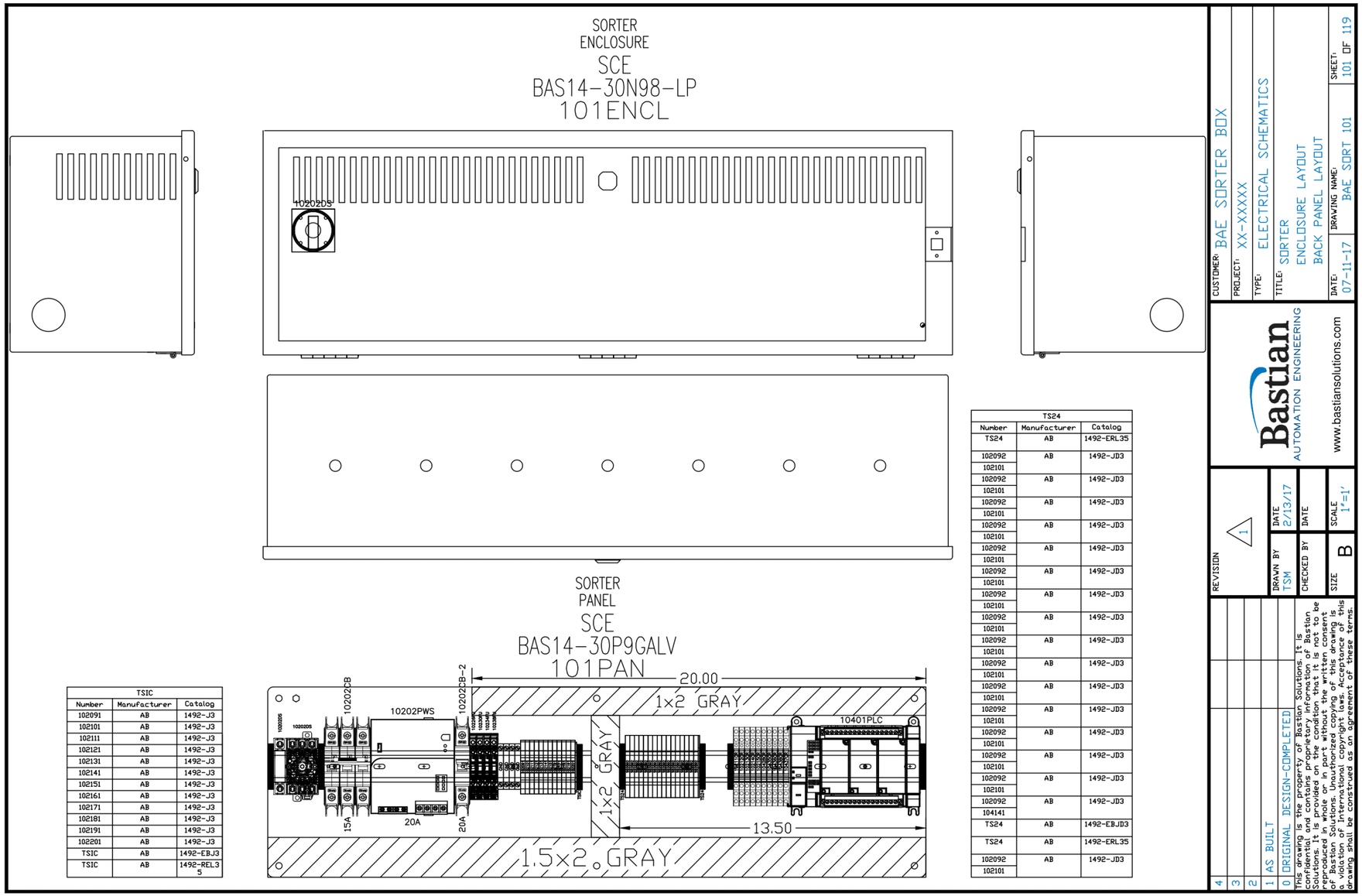

TSIC		
Number	Manufacturer	Catalog
102091	AB	1492-J3
102101	AB	1492-J3
102111	AB	1492-J3
102121	AB	1492-J3
102131	AB	1492-J3
102141	AB	1492-J3
102151	AB	1492-J3
102161	AB	1492-J3
102171	AB	1492-J3
102181	AB	1492-J3
102191	AB	1492-J3
102201	AB	1492-J3
TSIC	AB	1492-EBJ3
TSIC	AB	1492-REL3 5

TS24		
Number	Manufacturer	Catalog
TS24	AB	1492-ERL35
102092	AB	1492-JD3
102101		
102092	AB	1492-JD3
102101		
102092	AB	1492-JD3
102101		
102092	AB	1492-JD3
102101		
102092	AB	1492-JD3
102101		
102092	AB	1492-JD3
102101		
102092	AB	1492-JD3
102101		
102092	AB	1492-JD3
102101		
102092	AB	1492-JD3
102101		
102092	AB	1492-JD3
102101		
102092	AB	1492-JD3
102101		
102092	AB	1492-JD3
102101		
102092	AB	1492-JD3
102101		
102092	AB	1492-JD3
102101		
102092	AB	1492-JD3
102101		
102092	AB	1492-JD3
102101		
102092	AB	1492-JD3
102101		
102092	AB	1492-JD3
102101		
102092	AB	1492-JD3
104141		
TS24	AB	1492-EBJD3
TS24	AB	1492-ERL35
102092	AB	1492-JD3
102101		

Figure 39-Electrical Schematic for Divert Control Box, Sheet 2 of 7

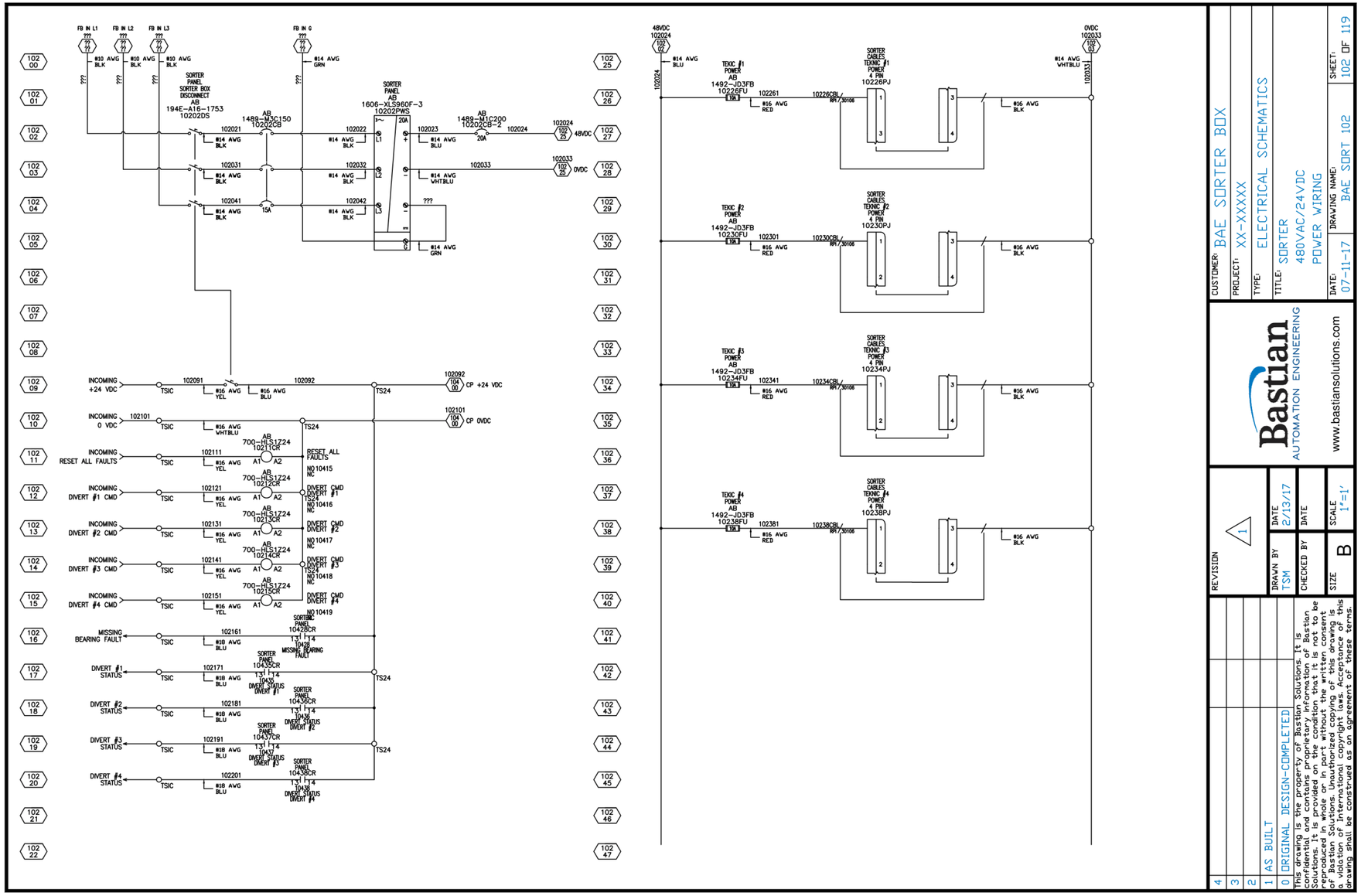

Figure 40-Electrical Schematic for Divert Control Box, Sheet 3 of 7

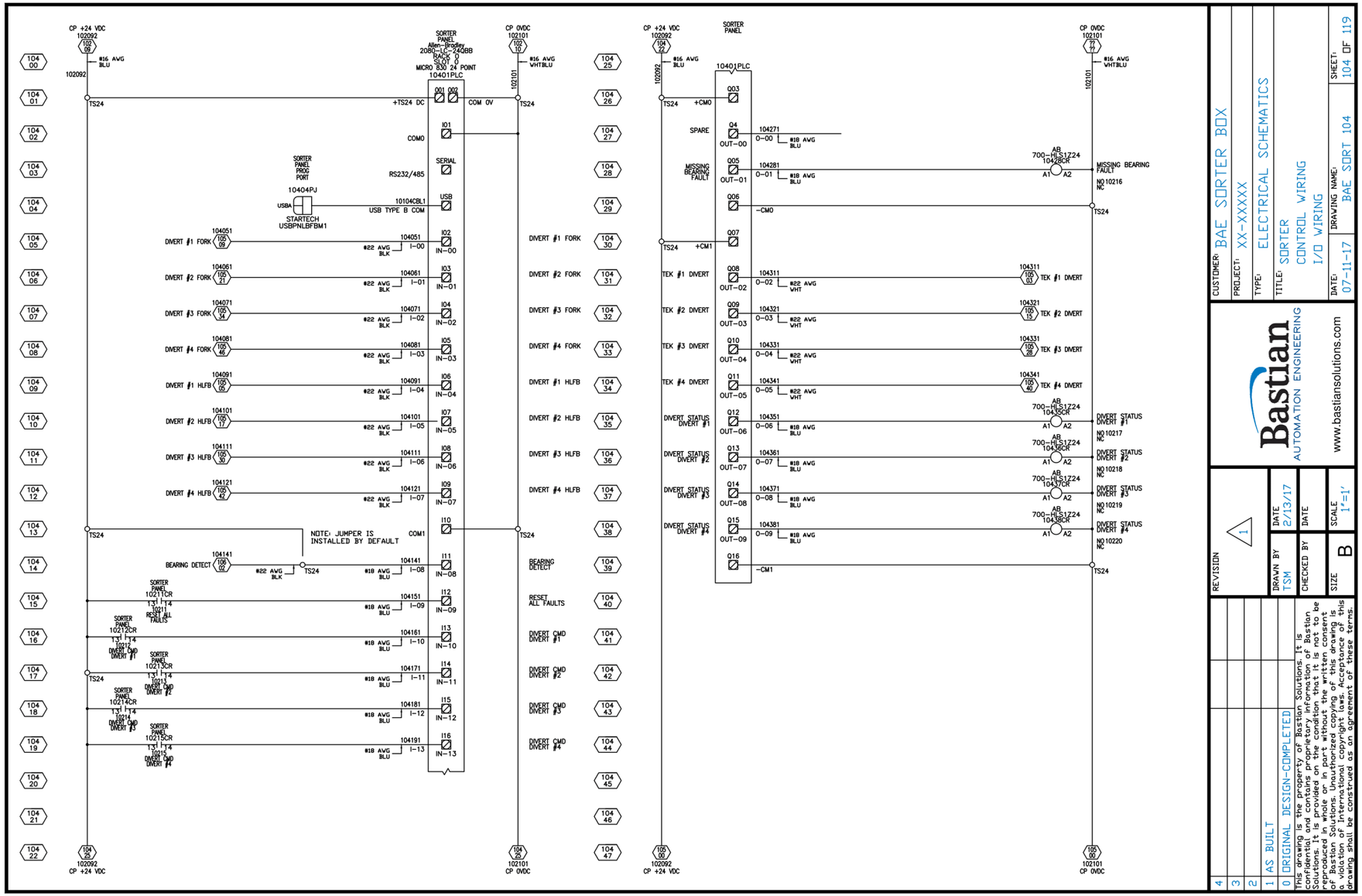

Figure 41-Electrical Schematic for Divert Control Box, Sheet 4 of 7

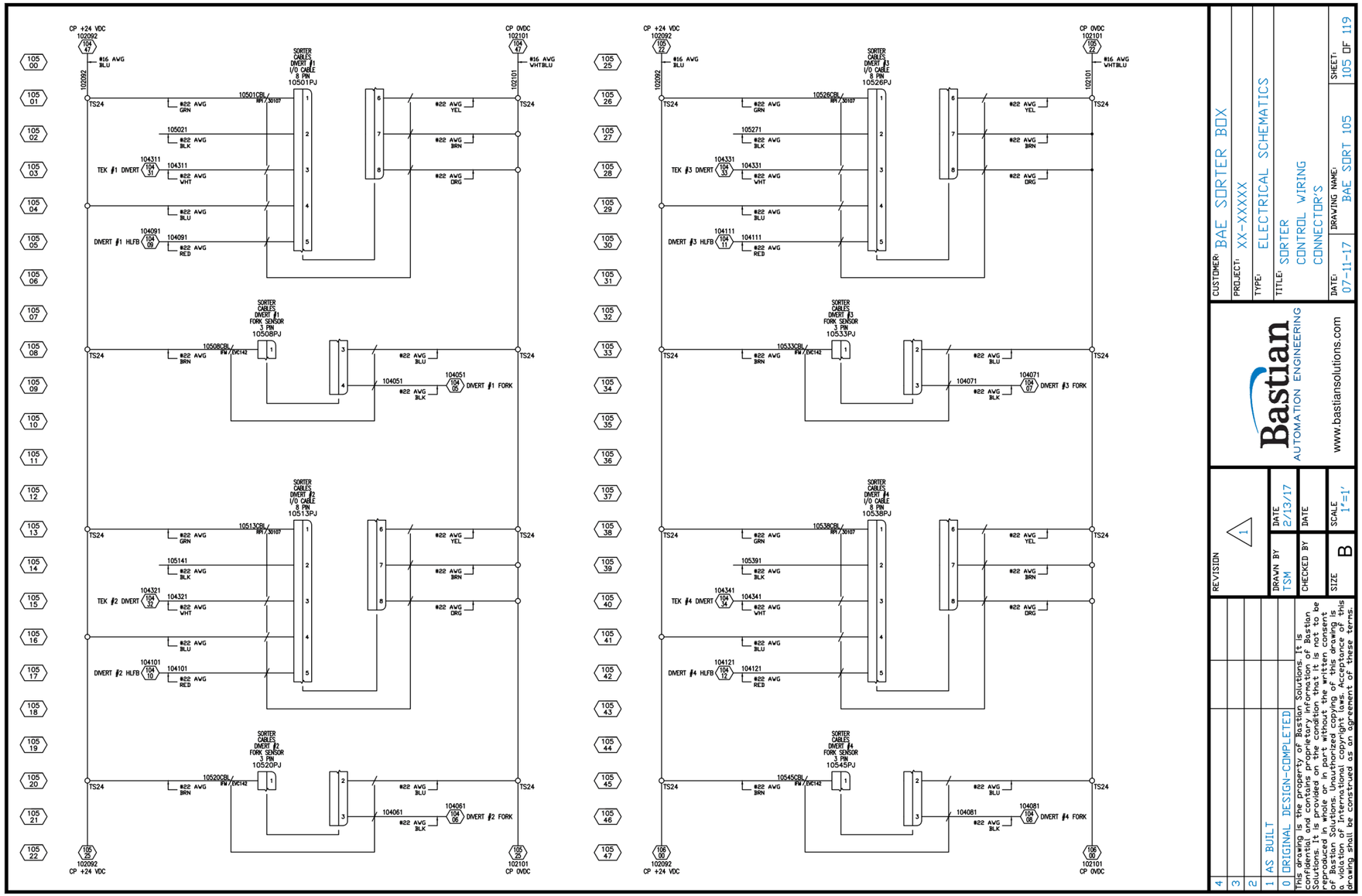

Figure 42-Electrical Schematic for Divert Control Box, Sheet 5 of 7

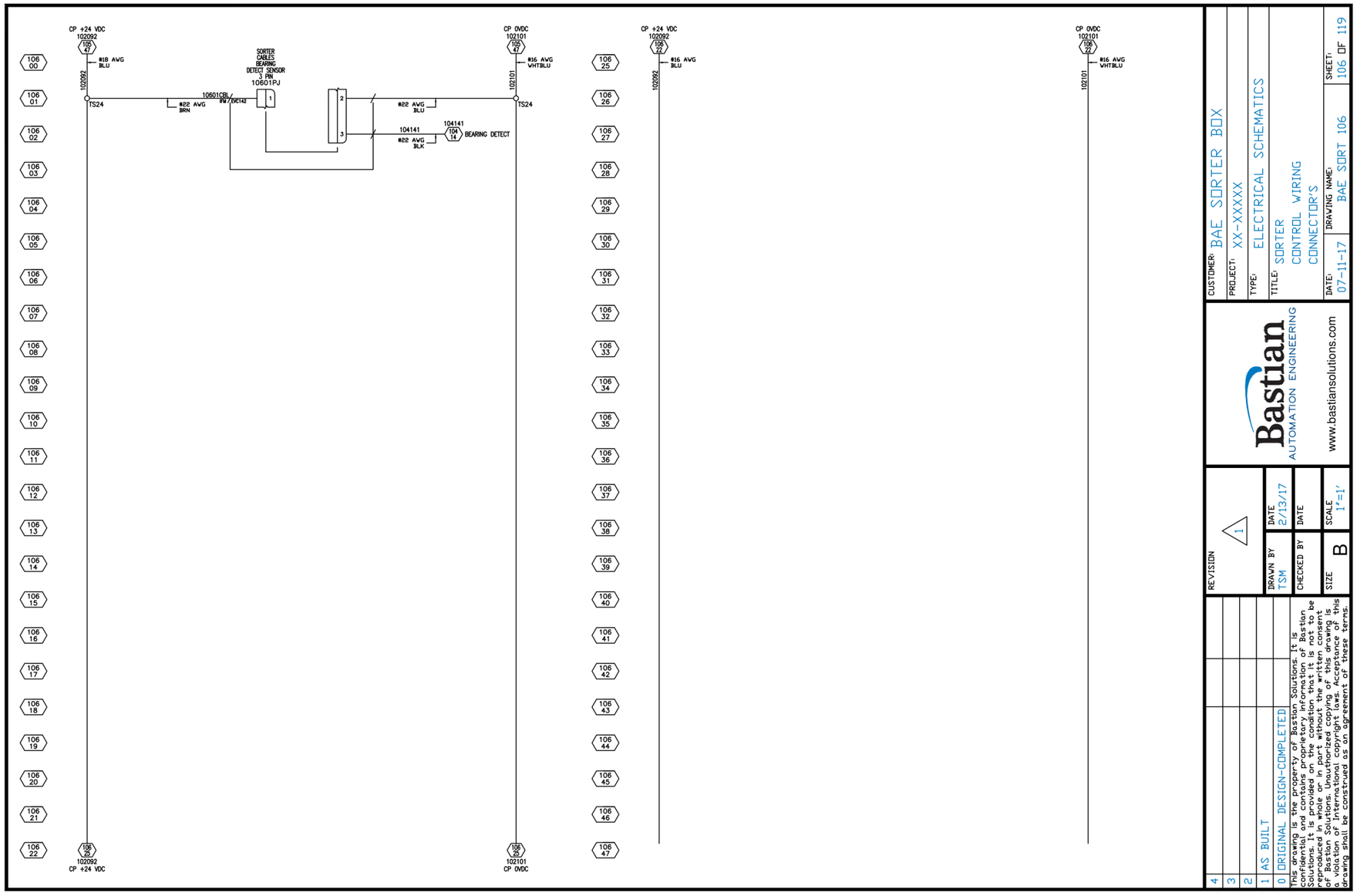

Figure 43-Electrical Schematic for Divert Control Box, Sheet 6 of 7

TAG	QTY	CATALOG	MFG	DESCRIPTION
GND	4	1492–J3	AB	SCREW CONNECTION TERMINAL BLOCK; 1492–J
TS24	2	1492–ERL35	AB	
	17	1492–JD3	AB	SCREW CONNECTION TERMINAL BLOCK; 1492–J
	1	1492–EBJD3	AB	END BARRIER; 1492–J
TSIC	12	1492–J3	AB	SCREW CONNECTION TERMINAL BLOCK; 1492–J
	1	1492–EBJ3	AB	END BARRIER; 1492–J
	1	1492–REL35	AB	
101ENCL	1	BAS14–30N98–LP	SCE	
101PAN	1	BAS14–30P9GALV	SCE	
10202CB	1	1489–M3C150	AB	CIRCUIT BREAKER, BULLETIN 1489 SERIES, 15 amps
10202CB–2	1	1489–M1C200	AB	CIRCUIT BREAKER, BULLETIN 1489 SERIES
10202DS	1	194E–A16–1753	AB	
	2	194E–HE4N–175	AB	
	2	194E–A16–NP	AB	
	1	194L–G3393	AB	
10202PWS	1	1606–XLS960F–3	AB	
10211CR	1	700–HLS1Z24	AB	HL TYPE TERMINAL BLOCK RELAY
10212CR	1	700–HLS1Z24	AB	HL TYPE TERMINAL BLOCK RELAY
10213CR	1	700–HLS1Z24	AB	HL TYPE TERMINAL BLOCK RELAY
10214CR	1	700–HLS1Z24	AB	HL TYPE TERMINAL BLOCK RELAY
10215CR	1	700–HLS1Z24	AB	HL TYPE TERMINAL BLOCK RELAY
10226CBL	1	30106	RPI	
10226FU	1	1492–JD3FB	AB	
10230CBL	1	30106	RPI	
10230FU	1	1492–JD3FB	AB	
10234CBL	1	30106	RPI	
10234FU	1	1492–JD3FB	AB	
10238CBL	1	30106	RPI	
10238FU	1	1492–JD3FB	AB	
10401PLC	1	2080–LC–24QBB	Allen–Bradley	
10404PJ	1	USBPNLBFBM1	STARTECH	
10428CR	1	700–HLS1Z24	AB	HL TYPE TERMINAL BLOCK RELAY
10435CR	1	700–HLS1Z24	AB	HL TYPE TERMINAL BLOCK RELAY
10436CR	1	700–HLS1Z24	AB	HL TYPE TERMINAL BLOCK RELAY
10437CR	1	700–HLS1Z24	AB	HL TYPE TERMINAL BLOCK RELAY
10438CR	1	700–HLS1Z24	AB	HL TYPE TERMINAL BLOCK RELAY
10501CBL	1	30107	RPI	
10508CBL	1	EVC142	IFM	
10513CBL	1	30107	RPI	
10520CBL	1	EVC142	IFM	
10526CBL	1	30107	RPI	
10533CBL	1	EVC142	IFM	
10538CBL	1	30107	RPI	
10545CBL	1	EVC142	IFM	
10601CBL	1	EVC142	IFM	

CUSTOMER: BAE SORTER BOX
PROJECT: XX–XXXXX
TYPE: ELECTRICAL SCHEMATICS
TITLE: SORTER PANEL BILL OF MATERIAL
DATE: 07–11–17
DRAWING NAME: BAE SORT 119
SHEET: 119 OF 119

Bastian AUTOMATION ENGINEERING
www.bastiansolutions.com

REVISION 1
DRAWN BY TSM — DATE 2/13/17
CHECKED BY — DATE
SIZE B — SCALE 1"=1'

4
3
2
1 AS BUILT
0 ORIGINAL DESIGN–COMPLETED

Figure 44-Electrical Schematic for Divert Control Box, Sheet 7 of 7

Bastian Solutions Conveyor Installation and Maintenance Manual

Model: Bastian Solutions Shoe Sorter Conveyor

Bastian Solutions, LLC
1821 Bastian Court
Westfield, IN 46074

Customer Support: ConveyorSupport@bastiansolutions.com